SX115 User Guide

Copyright © 2025 Martin Audio Limited

Publication date 2025-12-02

Table of Contents

Introduction 3
Optional accessories 4
- Set of four castors WHEELKIT 4
- Weatherised connector cover WRKIT 4
- Transit cover SX115TC 4
- M10 eye bolt HTKCT06 4
- Wind-up telescopic pole ASF20071 4
- Flying grid SXGRIDI15 5
- Set of four flying strips FKIT450 5

Connecting the SX115 6
- Pin connection summary 6

Weatherising the SX115 7
- To fit the weatherised connector cover 7

Fitting castors 8
- To fit castors 8

Flying a single SX115 9
- To fly a single SX115 9

Flying an array of SX115 10
- To fly an array of SX115 11
- To add subs to the array 12

Flying SX115 above WPM 13
- To fly SX115 above WPM 13

Flying SX115 above Torus T8 14
- To fly SX115 above Torus T8 14

Installing a pole 15
- To install a pole 15

SX115 amplifier compatibility 16
- Amplifier compatibility legend 16

System controllers 17
- Using other controllers 17

System design 18
- To download Display 3 18
- EASE files 18
- 3D SketchUp file 18
- Revit family 18
- DWG file 18

Other SX subwoofers 19
SX115 specification 20
SX115 technical drawing 21
Troubleshooting 22
- Technical support 22
- Service 22
- Warranty 22
- Unpacking 22
- Recycling 22

Introduction

The SX115 is a versatile, passive subwoofer featuring a powerful long-excursion 15” (380 mm) driver with 4” (100 mm) voice coil driver, water-resistant cone and triple roll surround. It delivers dynamic low-frequency performance from a very compact enclosure. Four reflex ports increase LF output efficiency and have a large frontal area to reduce turbulent air noise at high sound levels.

The durable plywood enclosure is finished in hardwearing textured paint and incorporates threaded inserts for eye bolt suspension of a single enclosure, as well as safety points. Inserts allow attachment of side rigging strips for flying installed arrays of up to four enclosures.

Ergonomic pocket handles assist handling and installation. The driver is protected by a coated steel grille with an acoustically transparent fabric backing. An M20 threaded plate on the top surface allows pole-mounting of Martin Audio full-range enclosures.

The SX115 can be used as a stand-alone subwoofer or stacked using locating skids and mating channels at the base and top of each enclosure. Cardioid operation can be achieved by arranging the SX115 in forward and rear-facing pairs, with each enclosure powered individually in conjunction with dedicated DSP presets.

With a response of 45 Hz –100 Hz ± 3 dB, the SX115 is ideal for use with Martin Audio point source systems (up to 12"), constant curve systems (such as TORUS 8) and line array systems (such as WPM). For crossover and EQ functions, we recommend the DX series controllers (DX0.4, DX0.6 and DX4.0) or the on-board processing of the iKON amplifiers (iK41, iK42 and iK81). If you use a DX series controller, you also need an amplifier, such as the VIA5002.

The SX115 is available exclusively in black (RAL 9005). With the addition of an optional connector cover, the SX115 is weather resistant and suitable for outdoor use. Castors and transit cover are available as optional accessories.

Optional accessories

Set of four castors WHEELKIT

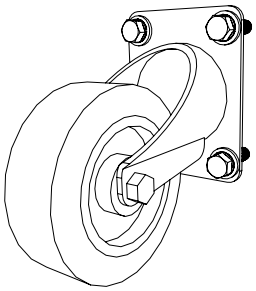

- Four heavy-duty 10 cm (4 in) swivel castors
- Fittings: 16 x M8 hex head bolts, 16 x flat washers and 16 x spring washers
- Optional accessory for the following subwoofers: SX115, SXC115, SXCF115, SX215, SX118, SXC118, SXCF118, SX218, SXP118, SXP218, Blackline Q118, Q218, X115, X118, X218, XP118
- Supplied with SXH218 and SXHF218

Weatherised connector cover WRKIT

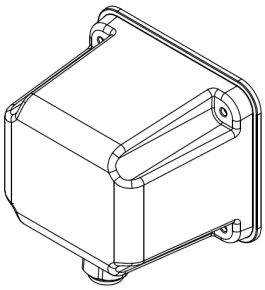

- Weatherised connector cover to protect the NL4 speaker connection and prevent water ingress
- Upgrades compatible subwoofers to IP24 rating
- Compatible with SX115, SX215, SX118, SXC118, SXCF118, SX218, SXH218 and SXHF218
- Two knockout holes, one on the side and one on the underside, allowing you to fit two cables or to choose where to fit one cable
- Contents of kit: connector cover, gasket, cable gland, lock nut, four cap head screws (M4 x 25 mm) and four fibre washers (M4)

Transit cover SX115TC

- Tour grade transit cover
- Cut outs for easy access to handles
- Protects the SX115 in transit

M10 eye bolt HTKCT06

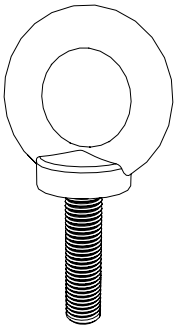

- M10 eye bolt for flying individual speakers
- Bolt size: 10 mm x 1.5 mm thread size
- Shank length: 35 mm (1 3/8 in)
- Working load limit: 740 kg (1,628 lbs)

Wind-up telescopic pole ASF20071

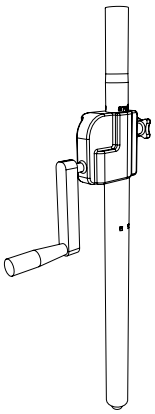

- Wind-up telescopic pole for mounting a speaker on a subwoofer
- Rugged steel pole with wind-up handle to allow you to raise and lower the speaker

- Locking screw and safety button
- Diameter: 35 mm (1 3/8 in) to fit standard top-hat fittings of portable speakers
- M20 threaded fitting to attach to the subwoofer
- Maximum load: 35 kg (77.2 lb)
- Pole length: 709 mm (27.9 in) to 1121 mm (44 in). This measurement includes the section inside the top-hat fitting and excludes the threaded section that attaches to the subwoofer

Flying grid SXGRIDI15

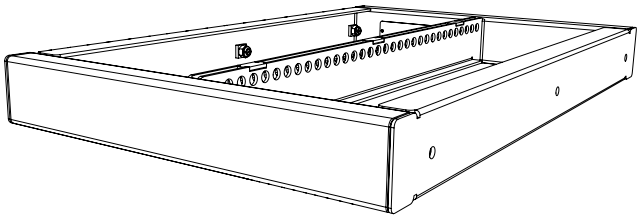

- Flying grid for arrays of SX115 or SXC115
- Fly arrays of SX115 or SXC115 above WPM or TORUS T8
- Installation not touring
- One or two-point pick-up
- Available in black (SXGRIDI15) and white (SXGRIDI15-W)
- Previous product code: SXC115GRIDI

Set of four flying strips FKIT450

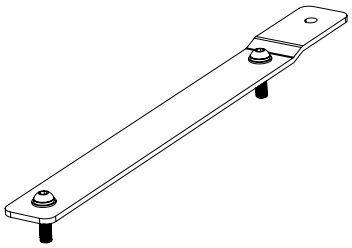

- Flying strips for SX115 only
- Each flown SX115 needs one set
- Installation not touring
- Contents: four bolt-on strips, eight hex button head bolts (M10 x 50 mm), eight spring washers (M10), eight plain washers (M10)

Connecting the SX115

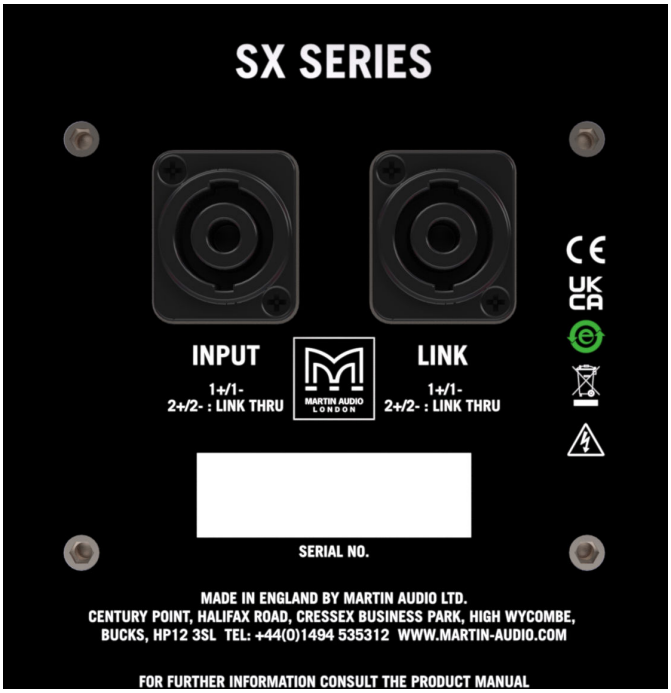

The SX115 has two NL4 sockets on the back panel, labelled INPUT and LINK. Despite the labels, the two sockets are the same, so you can use them either way round. However, we recommend you use them as labelled to simplify cabling checks. For both sockets, the pins connect as follows:

- Pins 1+/1− input to the speaker and link through to pins 1+/1− of the other socket.
- Pins 2+/2− link through to pins 2+/2− of the other socket.

Pin connection summary

Pin connections (input)	1+/1−
Pin connections (link)	1+/1− (linked from input 1+/1−), 2+/2− (linked from input 2+/2−)

Weatherising the SX115

To weatherise the SX115 for outdoor use, you just need to fit an optional weatherised connector cover WRKIT (page 4). The rest of the subwoofer is already prepared.

The connector cover protects the NL4 connection and prevents water ingress. It upgrades the SX115 to an IP24 rating.

To fit the weatherised connector cover

1. Remove one of the two knockouts from the connector cover. The knockout to use depends on your preferred cable angle. If you are using a link cable, remove both knockouts.
2. Fit the cable gland.
3. Feed the speaker cable through the gland and attach an NL4 connector. If the cable already has an NL4 connector, you will need to remove it first.
4. Remove the four screws from the connector panel on the back of the sub.
5. Plug in the NL4 connector.
6. Hold the cover and gasket in position and pull any excess cable through the cable gland.
7. Secure the cover using the fittings from the kit: these are four cap socket screws (M4 x 25 mm) and four M4 fibre washers.
8. Tighten the cable gland to ensure a waterproof seal.

Fitting castors

To fit castors to the SX115 you need an optional WHEELKIT (page 4) accessory. This is a set of four swivel castors along with all required bolts and washers.

Make sure you use the bolts from the kit. The screws from the cabinet aren't suitable.

To fit castors

1. Remove the M8 counter-sunk screws from the back of the SX115.

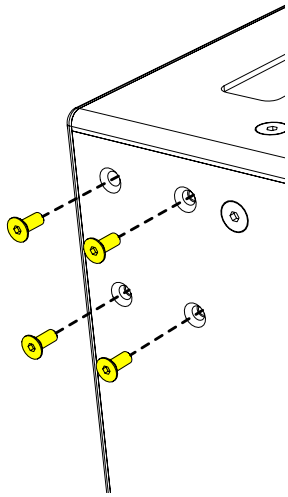

2. Bolt each castor in place using the fittings from the kit.

   Order of fittings: cabinet, castor, flat washer, spring washer, bolt.

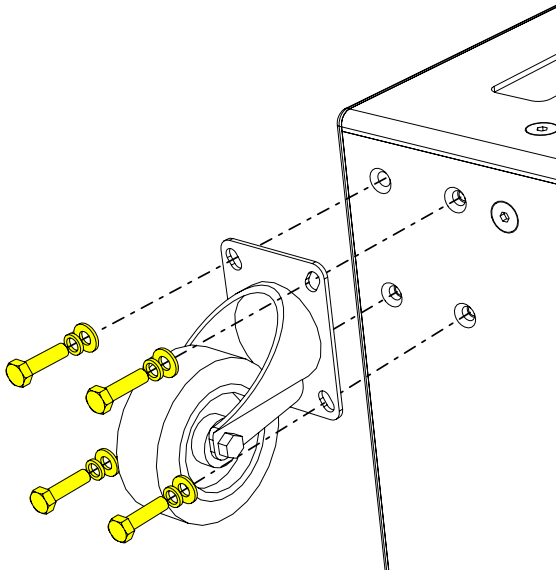

Flying a single SX115

You can fly individual SX115 subwoofers from ceilings, trusses or poles by using Martin Audio M10 shouldered eye bolts (HTKCT06) and appropriately rated steel ropes or chains.

> Eye bolts allow you to fly single subwoofers only.

Note that Martin Audio shouldered eye bolts are manufactured from cast steel and are specifically engineered and rated for flown applications.

> Don't use eye bolts from other manufacturers, as this could be dangerous.
>
> Forged-steel eye bolts available from DIY suppliers are **not** strong enough. Even cast or machined eye bolts rated for purpose can be unsuitable, as they can have wide shoulders that cause the bolt to tighten against the cabinet rather than the thread.

The SX115 has 24 M10 inserts: six on the top, six on the bottom, four on each side and four on the back.

> Flying heavy equipment in public spaces is extremely dangerous. Make sure the installer uses appropriately rated equipment and has suitable qualifications and experience.

To fly a single SX115

1. Remove some of the M10 counter-sunk screws from the SX115 (usually from the top) and screw in M10 eye bolts. We recommend five eye bolts: four to fly the subwoofer and one as a redundant safety bond.

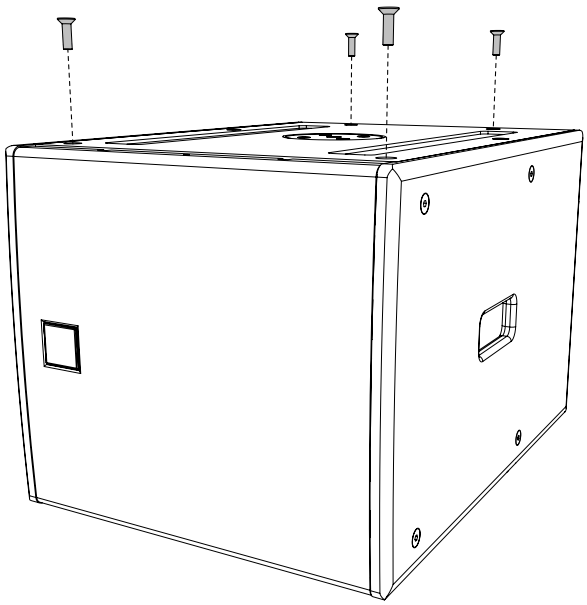

2. Install suitably rated fixings, such as sleeve anchors for ceilings, or girder clamps for trusses and scaffolding.

   Install the safety bond fixing in a different place from the main fixings. This is so that it can support the cabinet if the main fixings fail.

3. Connect the eye bolts and fixings using suitably rated steel rope or shackles and chains.

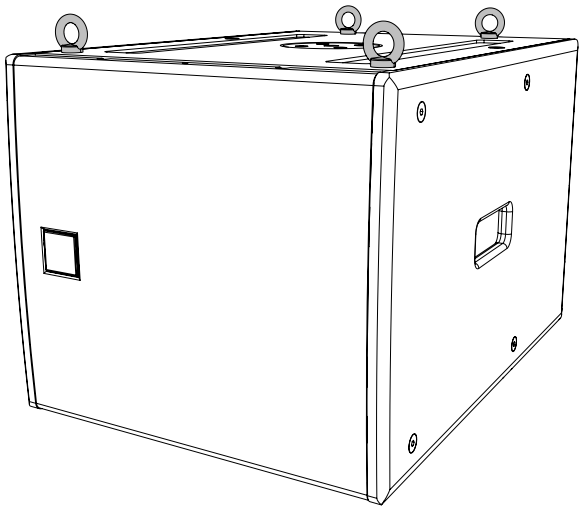

Flying an array of SX115

To fly an array of SX115 subs, you need the following optional accessories:

- **SXGRIDI15 flying frame**: attach this to the top of the array.
- **FKIT450 flying kit**: you need one kit for each SX115.

These accessories allow you to fly a maximum of four SX115 subs.

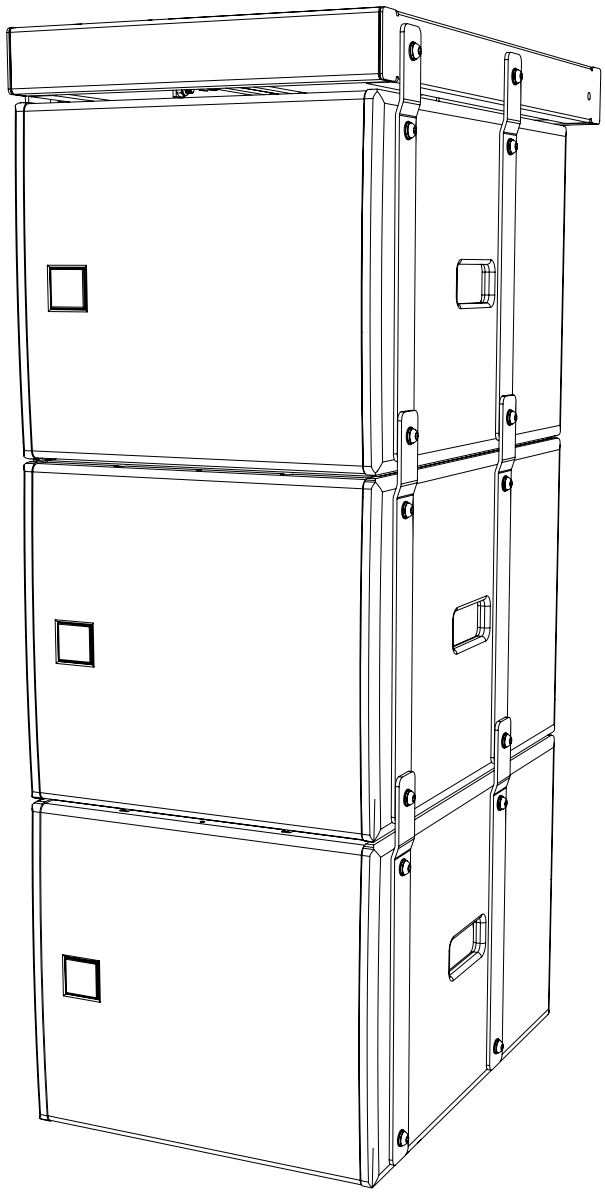

With a small array, it is easiest to stack the SX115 subs first and attach the fittings, as explained in the next section. If you don't want to stack the subs (for example, if you are on your own), you can attach the fittings to one sub, use a hoist to raise this sub in the air and then slide the next sub underneath. You can also use this method to create a large array by adding subs underneath a small array.

Flying heavy equipment in public spaces is extremely dangerous. Make sure the installer uses appropriately rated equipment and has suitable qualifications and experience.

To fly an array of SX115

1. Remove the M10 bolts from the sides of the cabinets, four from each side.

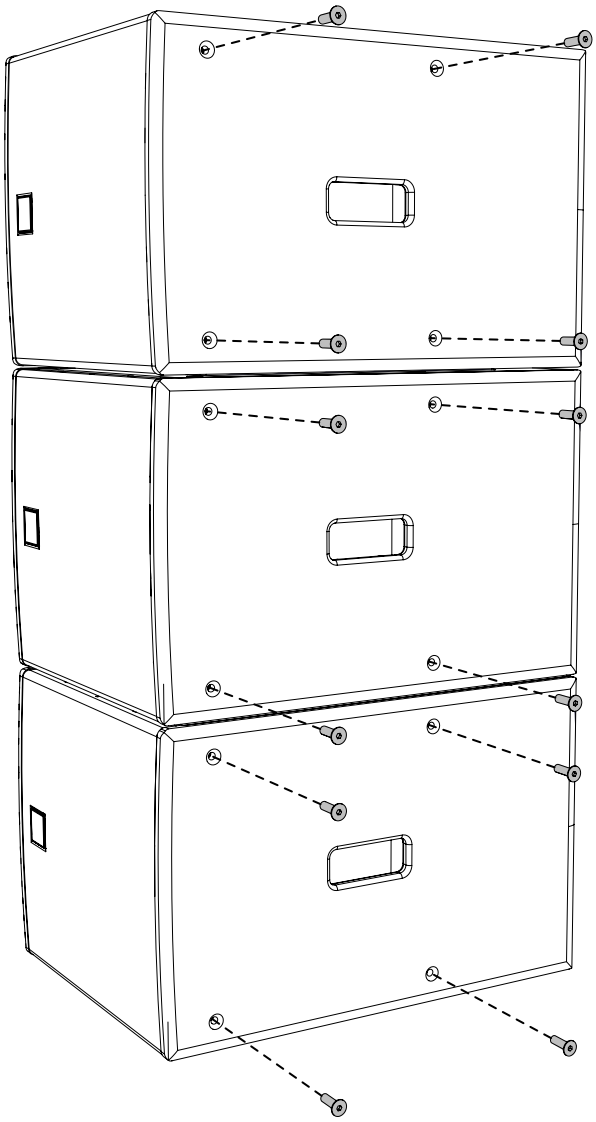

2. Secure four FKIT450 flying strips to each sub using the M10 screws and washers provided in the kit.

   Order of fittings: flying strip, flat washer, spring washer, screw.

Make sure you use the screws from the flying kit, as the screws from the cabinet aren't suitable.

Each flying strip overlaps the flying strip on the cabinet above, so you may find it easiest to attach the strips from the bottom of the array.

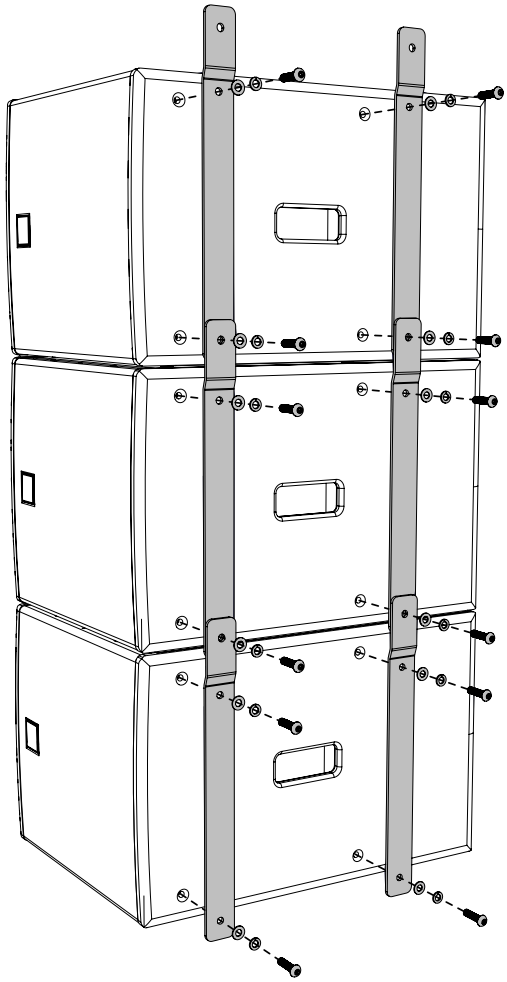

3. Place the SXGRIDI15 on top of the array.

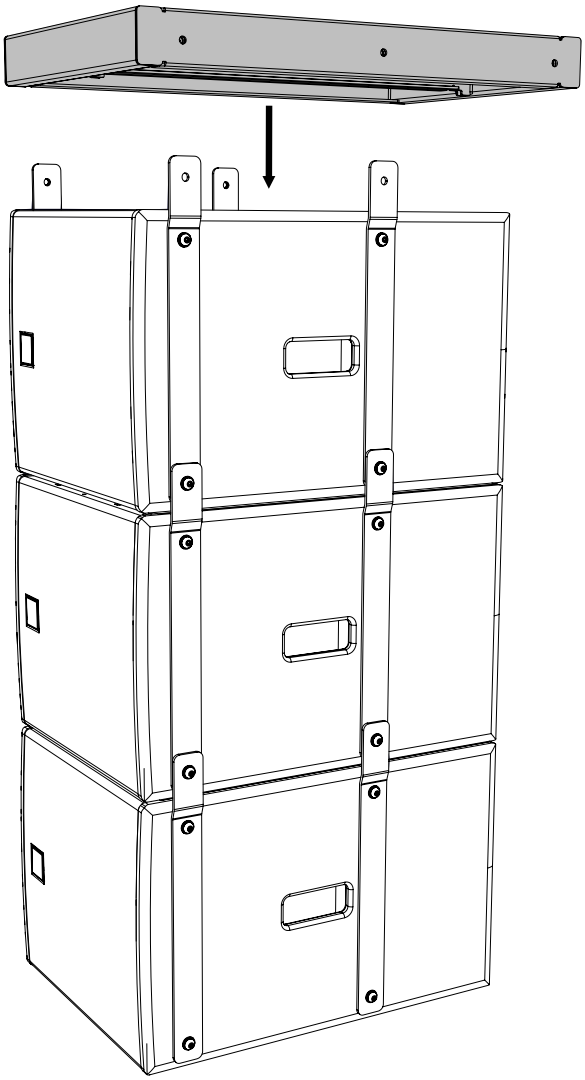

4. Align the holes in the flying strips and the grid, and secure on both sides using the screws and washers provided in the kit.

   Order of fittings: flying strip, flat washer, spring washer, screw.

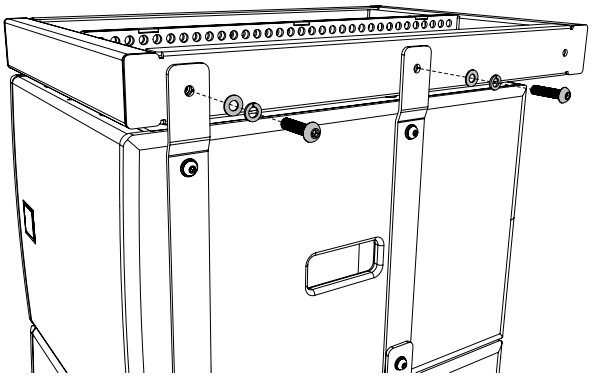

5. Lift the array into the air using a hoist.

To add subs to the array

1. Lift the array (or single subwoofer) using a hoist, as described in the previous section.
2. Slide a sub under the array and lower the array onto this sub.
3. Unscrew the four lowest screws from the four lowest flying strips, ready to attach the lowest sub.
4. Secure the four flying strips to the lowest sub using two screws per strip and attach each strip to the sub above using one screw.

   Order of fittings: flying strip, flat washer, spring washer, screw.
5. To attach further subs, repeat steps 1 to 4.

Flying SX115 above WPM

To fly an array of SX115 above WPM, you need the following optional accessories:

- **SXGRIDI15 flying frame**: attach this to the top of the array.
- **FKIT450 flying kit**: you need one kit for each SX115.
- **WPMTRIGI transition grid**: install this between the subs and the WPM cabinets.

These accessories allow you to fly a maximum of three SX115 above a maximum of 12 WPM.

Flying heavy equipment in public spaces is extremely dangerous. Make sure the installer uses appropriately rated equipment and has suitable qualifications and experience.

To fly SX115 above WPM

1. Create an array of SX115 as described in the section Flying an array of SX115 (page 10).
2. Use a hoist to lift the array from the ground.
3. Secure a WPMTRIGI transition grid to the bottom of the array using the M10 bolts supplied with the grid.
4. Attach WPM cabinets to the transition grid as described in the **WPM user guide**, available from our website martin-audio.com.

Flying SX115 above Torus T8

To fly an array of SX115 above Torus T8, you need the following optional accessories:

- **SXGRIDI15 flying frame**: attach this to the top of the array.
- **FKIT450 flying kit**: you need one kit for each SX115.
- **T8TRIGI transition grid**: install this between the subs and the Torus T8 cabinets.

These accessories allow you to fly a maximum of three SX115 above a maximum of six Torus T8 cabinets.

Flying heavy equipment in public spaces is extremely dangerous. Make sure the installer uses appropriately rated equipment and has suitable qualifications and experience.

To fly SX115 above Torus T8

1. Create an array of SX115 as described in the section Flying an array of SX115 (page 10).
2. Lift the array from the ground using a hoist.
3. Secure a T8TRIGI transition grid to the bottom of the array using the M10 bolts supplied with the grid.
4. Attach Torus T8 cabinets to the transition grid as described in the **Torus T8 rigging manual**, available from our website martin-audio.com.

Installing a pole

The SX115 has a top-mounted M20 thread plate for installing a pole, such as the Martin Audio wind-up telescopic pole ASF20071 (page 4). This pole allows you to mount a speaker with a top hat fitting and a weight up to 35 kg (77.2 lbs), such as CDD-LIVE, XD, WPM and MLA Mini. The wind-up mechanism allows you to mount the speaker at a lower level and then raise it into position.

Note that you can mount up to four WPM or MLA Mini on the ASF20071 by setting the pole at or below the level marked "Preset". The maximum load at this level is 56 kg (123.5 lbs).

To install a pole

1. Place the cabinet on a secure platform with the round plate on the top.

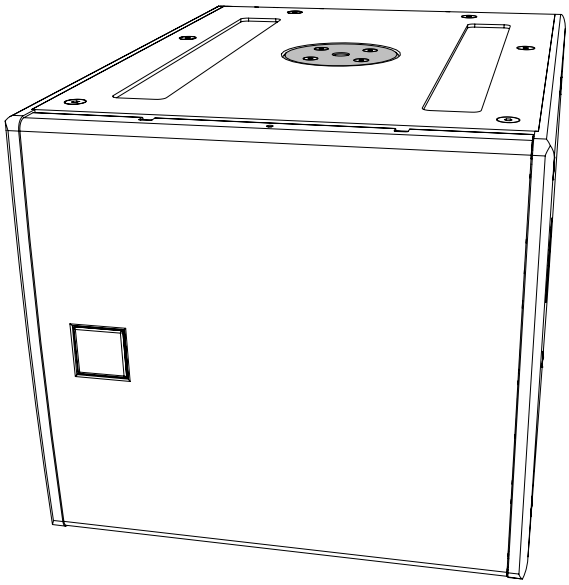

2. Screw the threaded pole into the M20 plate until secure.

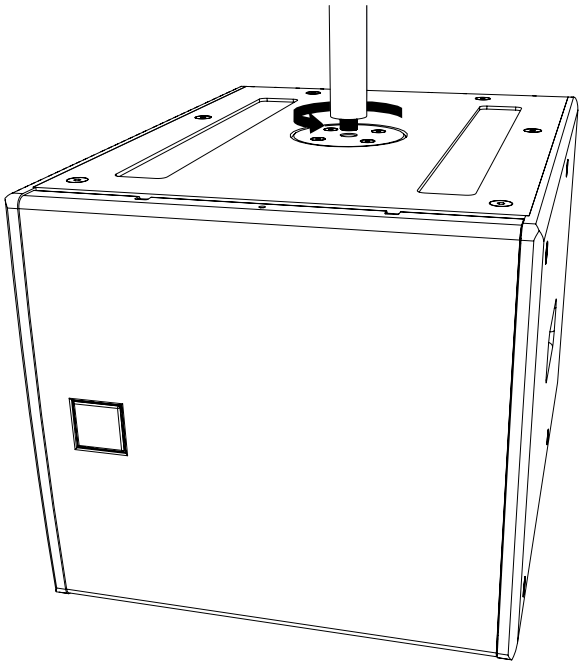

SX115 amplifier compatibility

Amplifier	Channels	Channels used	One SX115 per channel (8 ohm)	Two SX115 per channel (4 ohm)	Three SX115 per channel (2.67 ohm)	Four SX115 per channel (2 ohm)
iK41	One channel	1 of 4	No	No	No	No
	Two channels bridged	2 of 4	Yes	–0.3 dB	No	No
iK42	One channel	1 of 4	–0.3 dB	–0.3 dB	–0.3 dB	–1.1 dB
	Two channels bridged	2 of 4	Yes	Yes	No	No
iK81	One channel	1 of 8	–1.1 dB	No	No	No
	Two channels bridged	2 of 8	Yes	–1.1 dB	No	No
VIA5004	One channel	1 of 4	No	No	No	No
	Two channels bridged	2 of 4	Yes	–1.1 dB	No	No
VIA2502	One channel	1 of 2	No	No	No	No
	Two channels bridged	2 of 2	Yes	–1.1 dB	No	No
VIA5002	One channel	1 of 2	Yes	–1.1 dB	No	No
	Bridging not available	NA	NA	NA	NA	NA
VIA2004	One channel	1 of 4	No	No	No	No
	Bridging not available	NA	NA	NA	NA	NA

Amplifier compatibility legend

Yes	The amplifier channel can deliver the required power to achieve the full pink noise rated output of the loudspeaker, providing a reasonable amount of headroom for dynamic music content.
-1.0 dB	The amplifier channel provides sufficient power to meet the loudspeaker's RMS requirements (based on a 20 Hz – 20 kHz sine wave). However, it is unable to deliver the 6 dB peaks found in the AES pink noise test signal, which more accurately reflects the demands of dynamic music content. The table shows the shortfall in dynamic headroom, expressed in decibels.
No	The amplifier channel does not meet the loudspeaker's pink noise or RMS power requirements and is therefore not recommended. However, it may still be suitable if the application does not demand the full rated output of the loudspeaker.
NA	**Not available**: channel bridging isn't available with this amplifier.

Note that it is far more likely that an underpowered amplifier will damage a loudspeaker than one with excess power. Modern limiters in speaker presets can safely manage the amplifier's output. However, driving a system into distortion due to an insufficiently powered amplifier can cause heat buildup and lead to voice coil burnout, which is the most common form of loudspeaker damage.

If you need assistance with system design, please contact Technical Support (page 22).

System controllers

For system controllers, we recommend the Martin Audio DX0.4, DX0.6 or DX4.0. Note that if you use an iKON amplifier, you don't need a system controller as these amplifiers have on-board system processing. For further details, see our website martin-audio.com.

Using other controllers

If you use a controller from another manufacturer, you need to configure settings such as crossovers, limiters and equalisation points. You can find these settings in our **Loudspeaker parameter spreadsheet**, which we provide as a free download. For details of how to use the spreadsheet, read the instructions in the spreadsheet or watch the video guide.

To download the loudspeaker parameter spreadsheet

1. Go to our website martin-audio.com.
2. Select **Support > Loudspeaker Settings**.
3. Scroll to **CURRENT-PRODUCT-PARAMETERS** and click **DOWNLOAD**.

To view the video guide to the parameter spreadsheet

1. Go to our website martin-audio.com.
2. Select **Support > Loudspeaker Settings**.
3. Scroll to **PARAMETER VIDEO** and click **VIDEO**.

System design

To design your system and decide on the best positions for speakers and subs, we recommend Martin Audio **Display 3** software, which we provide as a free download from our website.

Display 3 allows you to model your space and experiment with various system configurations and speaker positions. Display 3 predicts the performance of your experimental configurations, allowing you to optimise the performance of your system at the design stage.

To download Display 3

1. Visit our website martin-audio.com.
2. Select **Support > Software/Firmware**.
3. Scroll to **Display 3** and click **Download**.

EASE files

For acoustic modeling of the SX115, we recommend using **Display 3**. If you need to use **EASE**, we provide a zip file of high-resolution GLL files as a free download. Note that the SX115 isn't supported in **EASE Focus** (the free version of **EASE**).

To download GLL files

1. Visit our website martin-audio.com.
2. Select **Support > GLL and CLF Data**.
3. Scroll to **SX Series** and click **Download**.

3D SketchUp file

For modelling the SX115 in **SketchUp**, we provide a 3D SketchUp file as a free download.

To download the 3D Sketchup file

1. Visit our website martin-audio.com.
2. Select **Products > Product List** and click on **SX115**.
3. Select the **Technical drawings & 3D models** section and click **SKP-BLACK**.
4. For accessories, select the **Accessories** section and click **SKP-B**.

Revit family

For modelling the SX115 in Revit, we provide a Revit family as a free download.

To download the Revit family

1. Visit our website martin-audio.com.
2. Select **Products > Product List** and click on **SX115**.
3. Select the **Technical drawings & 3D models** section and click **REVIT FILE**.

DWG file

For viewing the SX115 technical drawing in CAD software (such as AutoCAD), we provide a DWG file as a free download.

To download the DWG file

1. Visit our website martin-audio.com.
2. Select **Products > Product List** and click on **SX115**.
3. Select the **Technical drawings & 3D models** section and click **DWG**.
4. For DWG files for accessories, select the **Accessories** section and click **DWG**.

Other SX subwoofers

The SX Series subwoofers are a range of sub bass enclosures designed to complement Martin Audio full range systems. The range encompasses installation and touring subs, from ultra-compact miniature subs perfect as discreet, unobtrusive installation partners to the ADORN or CDD ranges, right up to very high output twin 18” models perfect for touring use in conjunction with Wavefront Precision line arrays. The larger models are built to be weather resistant and when used with an optional connector cover are suitable for occasional outdoor use as a portable system or for installation outdoors, as long as they are not directly exposed to the elements.

The range includes two powered, Dante equipped subwoofers. These are an ideal partner for CDD-LIVE. The range also includes three marine passive subwoofers for use in saltwater environments such as cruise ships and beach-side locations.

The optional accessories include eye bolts for flying smaller models, frames for flying larger models, and castors and rugged transit covers for use in touring.

For further details, visit our website martin-audio.com.

Passive SX subwoofers

		Castors	Transit cover	Weatherised connector cover	Marine version available
SX110	10" passive subwoofer	No	No	No	
SX210	Dual 10" passive subwoofer	No	No	No	
SX112	12" passive subwoofer	No	No	No	Yes
SX212	Dual 12" passive subwoofer	No	No	No	
SX115	15" passive subwoofer	Optional	Optional	Optional	
SXC115	15" passive cardioid subwoofer	Optional	Optional	No	
SXCF115	15" passive cardioid flown subwoofer	Optional	Optional	No	
SX215	Dual 15" passive subwoofer	Optional	Optional	Optional	
SX118	18" passive subwoofer	Optional	Optional	Optional	Yes
SXC118	18" passive cardioid subwoofer	Optional	Optional	Optional	
SXCF118	18" passive cardioid flown subwoofer	Optional	Optional	Optional	
SX218	Dual 18" passive subwoofer	Optional	Optional	Optional	Yes
SXH218	Hybrid® horn/reflex, dual 18" passive subwoofer	Supplied	Optional	Optional	
SXHF218	Hybrid® horn/reflex, dual 18" passive flown subwoofer	Supplied	Optional	Optional	

Powered SX subwoofers

		Castors	Transit cover	Rain cowl
SXP118	18" powered portable subwoofer	Optional	Optional	Optional
SXP218	Dual 18" powered portable subwoofer	Optional	Optional	Optional

SX115 specification

Type	Direct radiating subwoofer
Frequency response[1]	45 Hz – 100 Hz ± 3 dB, –10 dB @ 36 Hz
Drivers	LF: 15” with 4” voice coil, ferrite motor system
Rated power[2]	800 W AES, 3,200 W peak
Recommended amplifier	iK41 bridged (page 16)
Sensitivity[3]	100 dB
Maximum SPL[2,3]	129 dB continuous, 135 dB peak, 141 dB peak with crest factor 4
Nominal impedance	8 ohm
Dispersion	Omni-directional or cardioid when paired
Crossover frequency	100 Hz
Enclosure	Birch plywood
Finish	Black (RAL 9005)
Grille	Perforated steel
Connectors	2 x NL4
Pin connections (input)	1+/1–
Pin connections (link)	1+/1– (linked from input 1+/1–), 2+/2– (linked from input 2+/2–)
Fittings	2 x large skids on base with mating channels on top M20 top-mounted thread plate for optional pole Two pocket handles, one on each side 24 x M10 mounting points for optional eye bolts: 6 on top, 6 on bottom, 4 on left, 4 on right, 4 on rear 16 x M8 inserts on rear for optional castors
Dimensions	(W) 500 mm x (H) 451 mm x (D) 678 mm (806 mm with castors) (W) 19.7 in x (H) 17.8 in x (D) 26.7 in (31.7 in with castors)
Weight	36.5 kg (80.5 lbs)
Optional accessories	Set of four castors WHEELKIT Weatherised connector cover WRKIT Transit cover SX115TC M10 eye bolt HTKCT06 Wind-up telescopic pole ASF20071 Flying grid SXGRIDI15 Set of four flying strips FKIT450

[1]On-axis in open space (4 pi) at 1 m.

[2]Tested for 2 hours with band-limited pink noise as specified in AES2-1984 (r2003). Peak power defined as 6 dB above AES power.

[3]In half space (2 pi) at 1 m with 1 watt input and band-limited pink noise.

SX115 technical drawing

The drawing below shows the SX115 with castors. These are an optional accessory.

To load this drawing into CAD software, see DWG files (page 18).

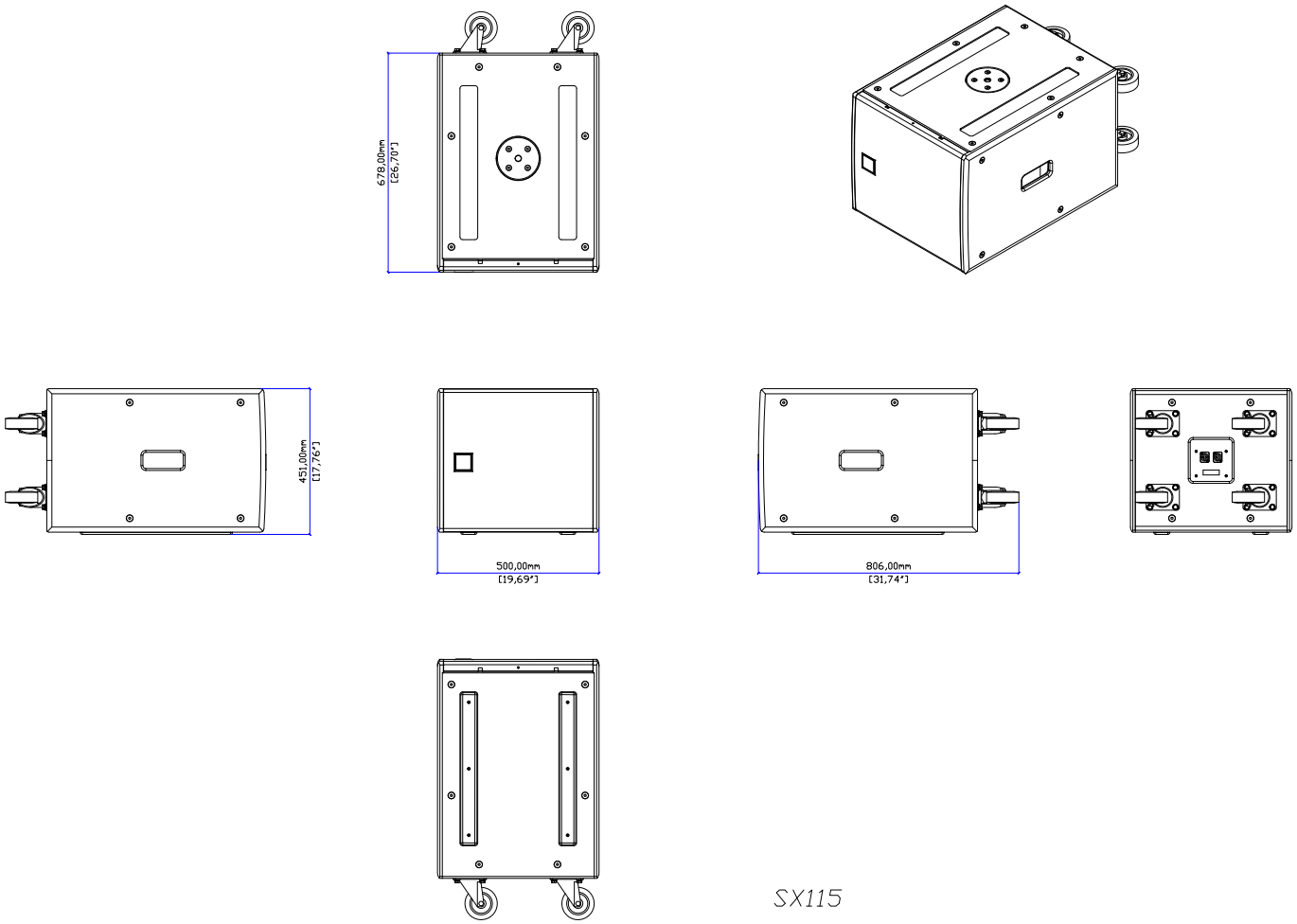

Troubleshooting

- Sound not right. Make sure the input and output connectors are fully plugged into the sockets. Check the sound quality with headphones at the amplifier or preamp.

Technical support

- For technical support, contact your supplier or Martin Audio technical support.
- For Martin Audio technical support, go to our website martin-audio.com and select **Support > Support Contacts**.

Service

- For service information, go to our website martin-audio.com and select **Support > Service & Returns**.

Warranty

- For warranty information, go to our website martin-audio.com and select **Support > Service & Returns**.

Unpacking

After unpacking, carefully check your speakers for any signs of transit damage. If you find any issues, inform your dealer straight away. If possible, keep the packaging for future use.

Recycling

When the product reaches the end of its life, please dispose of it responsibly at a recycling centre.

Martin Audio Limited

Century Point

Halifax Road

Cressex Business Park

High Wycombe

Buckinghamshire

HP12 3SL

England

FOR SALES ENQUIRIES

UK

+44 1494 535 312

info@martin-audio.com

NORTH AMERICA

+1 323 381 5310

www.martin-audio.com

Martin Audio, the Martin Audio logo and Hybrid are registered trademarks of Martin Audio Ltd. in the United Kingdom, United States and other countries; all other Martin Audio trademarks are the property of Martin Audio Ltd.

MARTIN AUDIO
LONDON