V1.3

WPL

Optimised Line Array

User Guide

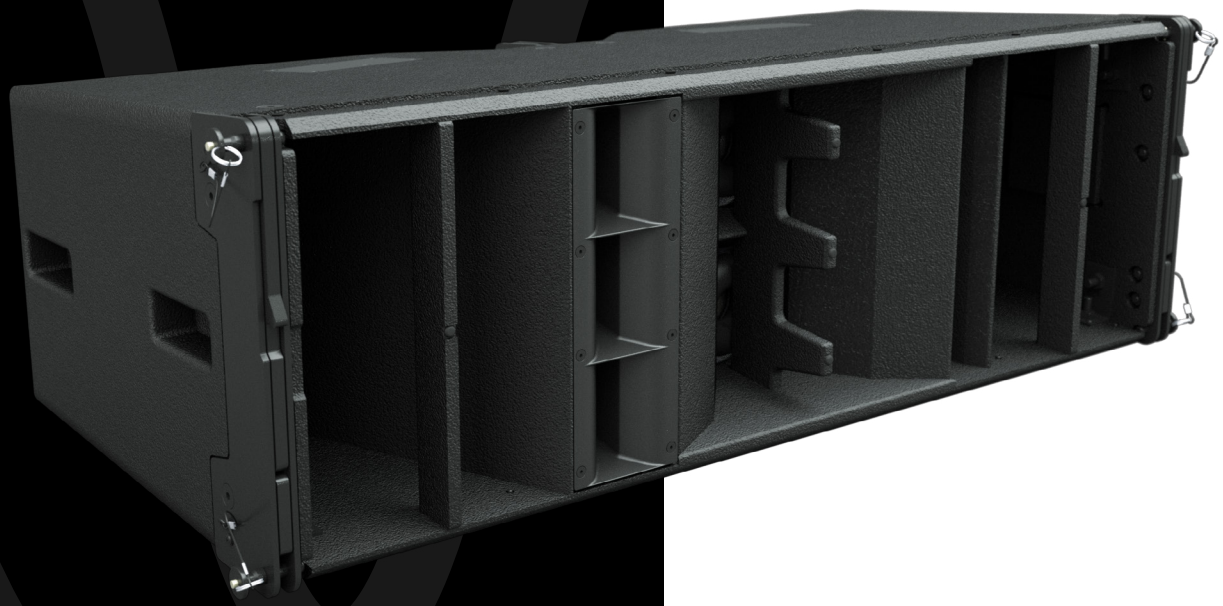

WAVEFRONT PRECISION

MARTIN AUDIO LONDON

Contents

Introduction

Wavefront Precision Longbow 3
About this Manual 3
Amplification, DSP and Networking 3
Important Safety Instructions 4
Caution 4
Unpacking the Units 4

System Overview

Wavefront Precision Longbow 5
Mechanical Design 5
Acoustic Design 5

Acessories

SXH218 Subwoofer 6
iK42 Amplifier 6

DISPLAY 2.3

Overview 7

VU-NET 2.2

Overview 11

Rigging WPL

Overview 15
WPL Connections 16
WPLGRIDt Touring Flying Frame 17
Transport Cart for WPL 18
Ground-stack Bar and Outriggers 19
Inclinometer Assembly 20
Flown Systems 23
Rigging WPL with WPLGRIDt 25
Landing the Array 34
WPL Flown with SXHF218 37
Ground-stack Deployment 41
Ground-stack with SXHF218 45

Specifications

WPL Specifications 49

Copyright © 2026 Martin Audio Ltd.

Introduction

Wavefront Precision Longbow

Drawing on the research and technology behind MLA® Series, the Wavefront Precision Series is a new generation of multipurpose line arrays designed to bring Martin Audio's legendary sound, coverage consistency and control to a broader range of touring applications, installations and budgets.

Wavefront Precision line arrays are designed as complete systems with external iKON® multi-channel amplifiers and optimized by automated DISPLAY™ software.

Adopting the principle of scalable resolution, with external, dedicated multi-channel amplifiers, Wavefront Precision line arrays are uniquely flexible, upgradeable and financially accessible.

With exceptional line array performance guaranteed by the acoustic design itself, scalable resolution unlocks the full potential of a Wavefront Precision array and provides an adaptable pathway into the world of advanced optimisation.

The greater the resolution of the array in terms of individually driven enclosures, the more precisely DISPLAY can fine-tune audience coverage and hold the frequency response and SPLs throughout the venue within a tight window specified by the user.

For the first time in the marketplace the decision on the level of resolution and control that is right for the install, client, event or budget is yours.

About this Manual

This manual explains in detail the individual components that comprise a complete WPL system. System wiring and rigging is explained and the two key software packages are covered. It is not however the intention for this manual to be the sole tutorial medium for those wishing to use the system. Extensive training media is available via the Martin Audio website and training webinars are held on a regular basis in order to help you gain a full understanding of the systems and their operation.

Amplification, DSP and Networking

Wavefront Precision line arrays are designed as complete systems with dedicated, high performance iKON multi-channel Class D amplifiers.

Copyright © 2026 Martin Audio Ltd.

Important Safety Instructions

Please read these instructions and retrain for future reference. Heed all warnings and follow all instructions.

- No naked flame sources such as lighted candles should be placed on the apparatus.
- Do not block any ventilation openings.
- Install in accordance with the Martin Audio instructions.
- Do not install near any heat sources such as radiators, heat registers, stoves or other such apparatus that produce heat.
- Do not defeat the safety purpose of the grounding-type plug. A grounding plug has two blades and a third grounding prong. The third prong is provided for your safety. If the provided plug does not fit your outlet consult an electrician for replacement of the obsolete outlet.
- Protect the power cable from being walked on or pinched particularly at plugs, convenience receptacles, and the point where they exit from the apparatus.
- This equipment must be earthed.
- Only use attachments / accessories specified by Martin Audio.
- Use only with wheelboard and rigging hardware specified by Martin Audio. When moving using supplied wheelboards, caution should be used to avoid injury from the cabinet tipping over.
- Unplug this apparatus during lightning storms or when unused for long periods of time.
- No user serviceable parts inside. Refer servicing to qualified service personnel. Servicing is required when the apparatus has been damaged in any way such as power supply cord or plug is damaged, liquid has been spilled or objects have fallen into the apparatus, the apparatus has been exposed to rain or moisture, does not operate normally, or has been dropped.
- Do not remove covers.

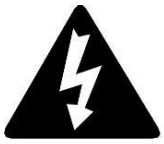

Caution

To reduce the risk of electric shock do not remove any covers. There are no user serviceable parts inside the units. Refer servicing to qualified service personnel only. Call Martin Audio Ltd on +44 (0) 1494 535312 or e-mail info@martin-audio.com for service.

Unpacking the Units

After unpacking the unit, please check it carefully for any damage. If any is found, immediately notify the carrier concerned – you, the consignee, must instigate any claim. Please retain all packaging in case you need to return the unit.

Please consider the environment. When the product has reached the end of its useful life, please dispose of it responsibly through a recycling centre.

Copyright © 2026 Martin Audio Ltd.

System Overview

Wavefront Precision Longbow

WPL is a three-way, bi-amp, large format line array element consisting of two 12” neodymium magnet low frequency drivers in a Hybrid® configuration, two 6.5” neodymium magnet mid frequency drivers, and four 1” neodymium magnet high frequency compression drivers loaded by constant directivity waveguides. In conjunction with automated DISPLAY system design and VU-NET network control software applications, WPL features scalable resolution for advanced array control, resulting in outstanding levels of consistent, high quality audio that can be distributed to every point throughout the audience in a venue.

WPL is a new breed of large-format optimised line array which brings innovative acoustic design, ultra-high performance and coverage consistency to a wider range of users, applications and budgets than previously possible. A three-way, bi-amp system, it features horn-loaded low-frequency, mid and HF sections to raise efficiency and increase output. Its high efficiency acoustic design can equal or outperform larger, direct radiator systems — a 12-box array will throw beyond 80 metres (200ft) and deliver impressive rock levels to a 8,000-seat venue, saving on truck space and weight.

Mechanical Design

WPL is designed mechanically to be an easy to handle, quick to rig, safe, rugged and stable touring loudspeaker. The cabinet is constructed predominantly from high grade multi-laminate birch and poplar plywood, with an integral 3-point rigging system. Two side pocket handles and two rear grip handles make handling safe and easy, and the cabinet is finished in black textured paint with a fabric-backed protective steel grille.

Acoustic Design

The WPL’s low frequency section consists of 2 x 12” (300mm) neodymium drivers in a Hybrid configuration which marries the benefits of horn and reflex loading. Each driver is slot-loaded into a short horn to give a high sensitivity of 103dB @ 1m/2.83V, while the rear of the driver is reflex-loaded to extend the LF output. The punch and low-frequency extension produced from such a small enclosure volume are remarkable.

Mid and HF horns are physically separate — a key factor in the WPL’s exemplary 90° horizontal constant directivity dispersion pattern. The midrange horn design utilises 2 x 6.5” (165mm) neodymium drivers to produce a high SPL of 134dB @ 1m/2.83V, while the HF section employs 3 x 1” (25mm) exit neodymium compression drivers which feed three individual horns. Use of multiple small HF drivers instead of a more traditionally-used large format compression driver results in less distortion and a more extended HF response.

Copyright © 2026 Martin Audio Ltd.

Acessories

SXH218 Subwoofer

The SXH218 is an extremely powerful subwoofer capable of producing 148dB peak output at 1m. It is the ideal partner for Wavefront Precision WPL arrays where maximum low frequency output is required. It features dual long excursion 18” (460mm) /4.5” (115mm) voice coil neodymium driver with a water-resistant cone and triple roll surround in a Hybrid enclosure which couples the high efficiency of a horn loaded system with the sub frequency extension of reflex loading.

The enclosure is constructed from multi-laminate plywood and coated with hard-wearing textured black polyurea. A rigid perforated steel grille protects the front of the enclosure, while interlocking skids protect the top and bottom surfaces and prevent movement when stacked.

iK42 Amplifier

The iKON iK42 is an advanced 4-channel controller amplifier which combines very high-power density with superb audio performance, state-of-the-art DSP and network control for WPL systems.

The iK42 can deliver a full 5000 watts per channel into 2 ohms with all channels driven while remaining highly efficient. Its high efficiency reduces the energy drawn from the mains supply and ensures the power reserves needed to deliver superb sound under arduous live conditions.

Ethernet is used for system remote control and monitoring via Martin Audio’s VU-NET software application, while a user-friendly front panel interface allows full local control of all features. Dante digital audio network inputs are also provided for digital audio distribution and control.

Powerful DSP is fully integrated into the iK42 to provide a multitude of features that ensure maximum performance and worldwide compatibility. It also provides up to 1000 FIR filter taps @ 48kHz on each output channel, which is essential to implement DISPLAY’s wide bandwidth optimisation process in WPL line array systems. The iK42 employs comprehensive protection functions to maintain safe operating conditions of both the amplifier and the loudspeakers driven — including a sophisticated loudspeaker limiter suite which incorporates peak, RMS and excursion limiting, as well as multiband limiting for passive 2-way systems.

Copyright © 2026 Martin Audio Ltd.

DISPLAY 2.3

Overview

DISPLAY 2.3 is a unique software application for Wavefront Precision systems which calculates both inter-cabinet splay angles and the DSP parameters for optimum system performance in any given space. Unlike competitors' systems which generally use a basic geometric calculation to aim their arrays, DISPLAY uses an extremely accurate computer model of the array to analyse the system performance in a drawing of the venue. This allows DISPLAY to precisely calculate the parameters for the system to get exactly the coverage you have specified. As a system designer you determine exactly how you would like the system to perform in the space; the SPL contour from the front to the back of your audience region, how much spill into non-audience areas is acceptable and even specify designated Hard Avoid® areas that the system will actively process to reduce spill to a minimum - great for producing a quiet stage or for reducing off-site noise pollution at outdoor events.

The application is very straightforward to use taking you through a series of steps in a logical order. In fact, it won't allow you to attempt to design a system in the wrong order; steps need to be completed one after the other in the correct order making it very straightforward to design an array that will perform to its maximum potential.

DISPLAY opens with a dashboard at the top of the screen the initial view prompting you to specify your array which is the first step of the design process. WPL, WPC or WPM are available along with the Multicellular family of products. You next specify how your array will be deployed – flown, or ground stacked – specify the number of cabinets and give the array a name.

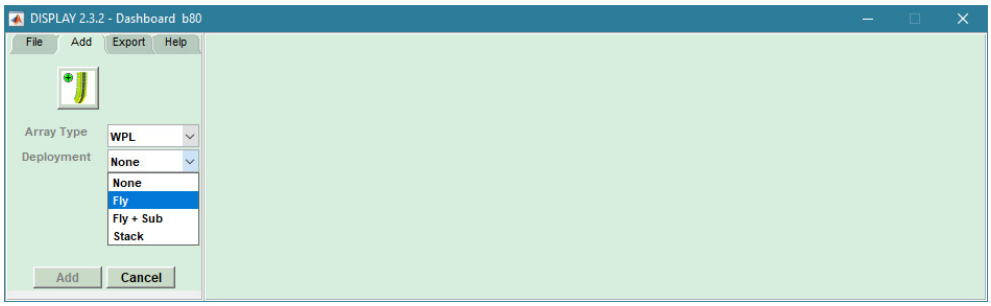

The dashboard changes to show the tabs from left and right in the order in which the design will be completed.

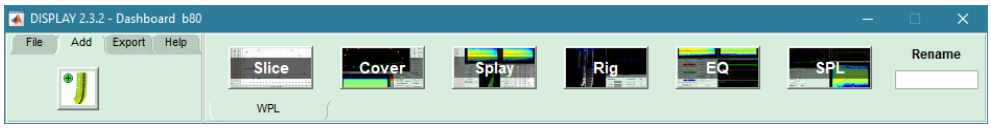

First a 2D slice of the venue is created, the coverage within the venue is specified and the splay angles calculated. A rigging report allows you to deploy the array and whilst that is being done the EQ coefficients are calculated. Finally, an SPL report gives detailed information showing exactly how the system will perform. The computer model is accurate to within +/- 1dB of actual measured results, meaning the SPL tab is a reliable overview of how well your system design will cover the space.

Copyright © 2026 Martin Audio Ltd.

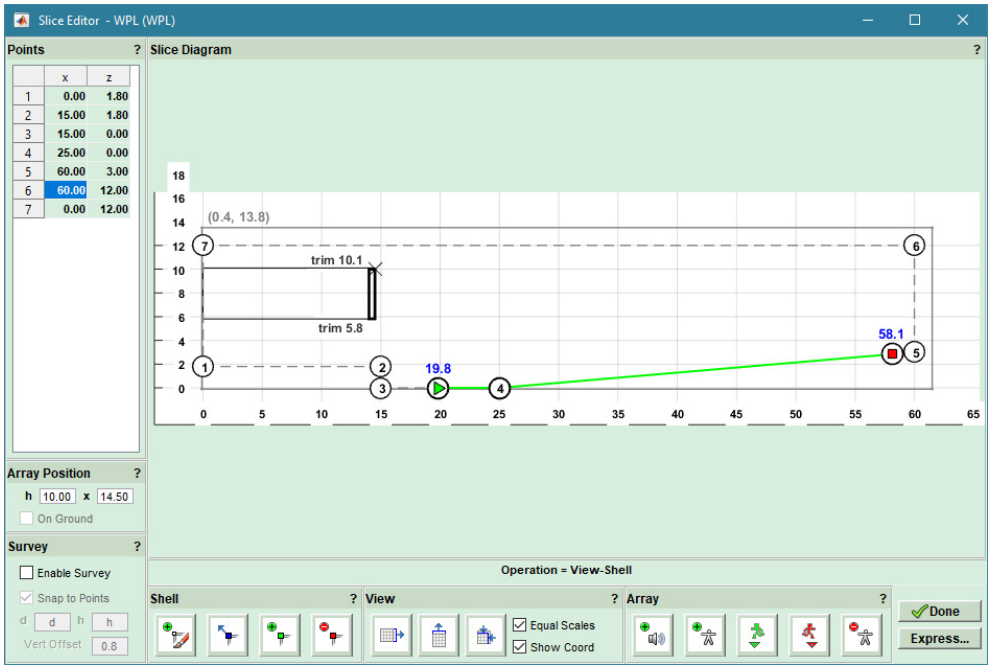

The 2D slice is either drawn from scratch or you can also import a shell drawing from a previous project if you are working in a venue you have visited previously. The slice is a side view of the venue. It is drawn anticlockwise starting at the back of the stage and clicking to define the position of vertices that define all of the planes within the venue. This doesn't have to be done accurately as you can refine the precise position of the points working from architects' drawings or measurements you have taken yourself. The array is positioned and the audience region specified from start to finish.

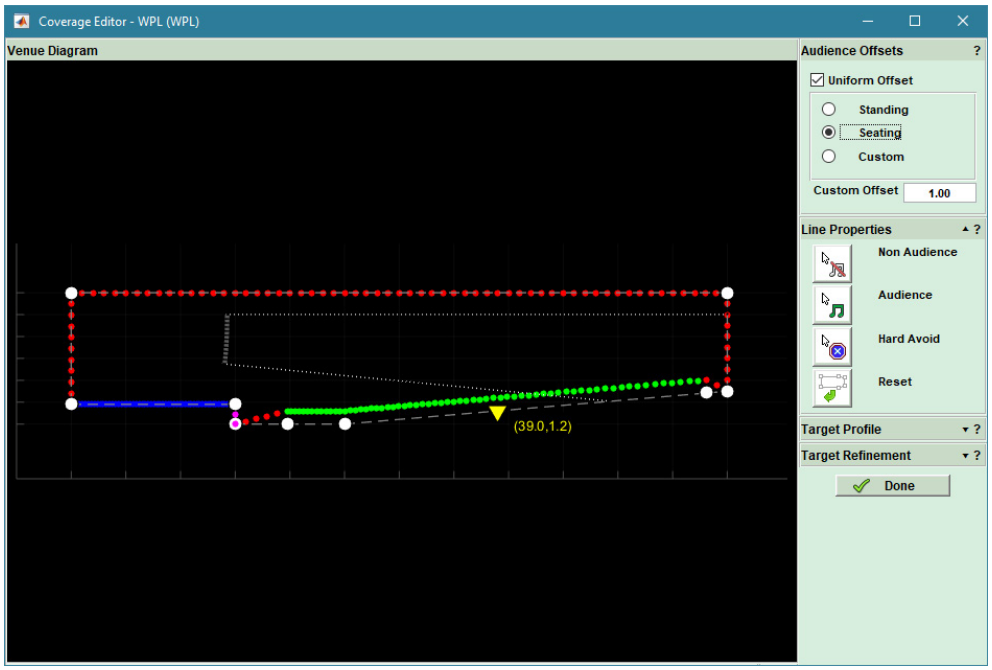

The coverage tab shows your 2D model with the planes refined into three types; audience in green, non-audience in red and hard avoid in blue. Each dot represents a virtual microphone position at which the software will take response measurements using the integral computer model. The dots in the critical audience region are closer together for greater accuracy and are spaced closer together at the start of the audience region to mirror how each region is covered by sections of the array. The audience offset can be edited – standing, sitting or a custom offset – and each region can be edited, perhaps changing a section under a balcony from audience to non-audience for example. The SPL profile can be modified and the environmental conditions entered to allow optimisation to compensate for air absorption, particularly critical for outdoor events.

Copyright © 2026 Martin Audio Ltd.

In the splay tab you can refine the quantity and position of the array before the system optimises the inter-cabinet splay angles and the "aim" angle for the flying grid.

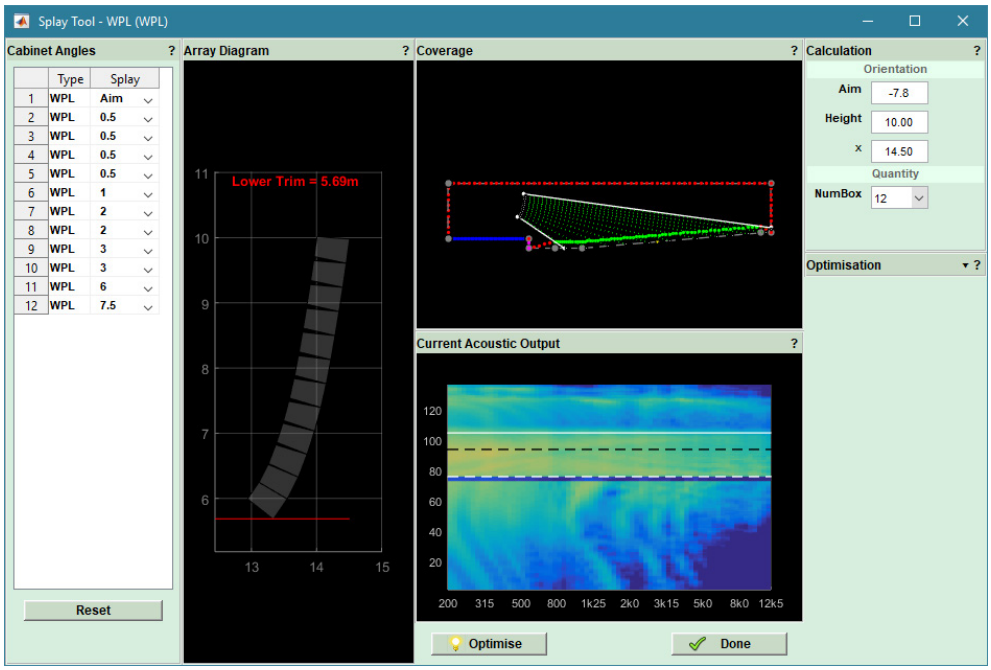

Once this is complete you can further refine how the array is to be deployed in the 'Rig' tab; choosing for example between a 2-point hang and a single point for which the application will display the best position on the flying frame to give the nearest angle to the optimised aim. The actual physical angle that the specified hole in the frame will give will be displayed, with the option to use this angle in the optimisation so that the array EQ is optimised for the actual physical position in which the array is installed.

Finally, the load on each flying point is shown and critically the 'Rig' tab shows if the array is safe and meets both BGVC1 and DIN18800 standards.

With the physical deployment underway you can progress to optimise the EQ. Again, you can enter the environmental conditions and can balance the three goals of response in your audience region, leakage to non-audience and the Hard Avoid performance. By default, each are given equal importance but if your application demands particular emphasis on any one of these parameters, they can be given greater importance.

Copyright © 2026 Martin Audio Ltd.

The resolution is entered as 1 or 2 box for WPL.

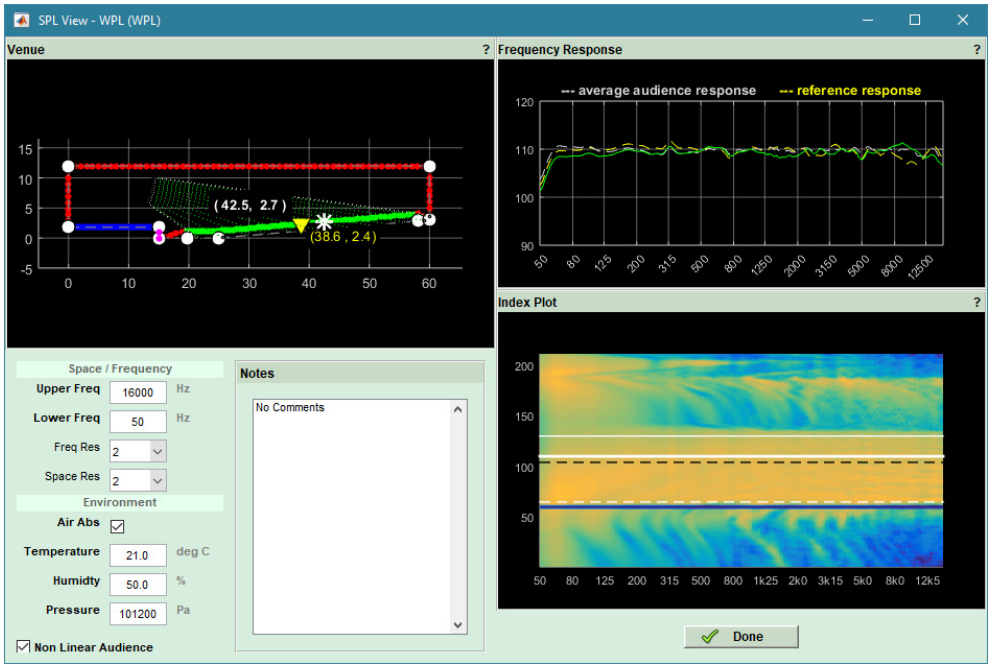

The SPL tab shows the system performance. The entire venue SPL is displayed on an index plot with frequency along the horizontal axis and position within the venue along the vertical. SPL is indicated with colour, blue being quietest moving through the colour spectrum to red which is the loudest. You can move the cursor around the index plot and the position is shown on the 2D slice of the venue top left whilst showing the frequency response at that position on the graph on the right.

The final stage is to export your design. You can produce a printable rigging report, a wire-frame 3D model of the array, export 3D data for use with EASE and most importantly export the project as a D2P file which can be uploaded directly to an iKON amplifier for powering Wavefront Precision systems.

DISPLAY 2.3 can be downloaded from the Martin Audio website: www.martin-audio.com/support/software. There is also a comprehensive user guide to take you through the design process in detail. We strongly recommend downloading the user guide to fully understand the application.

Copyright © 2026 Martin Audio Ltd.

VU-NET 2.2

Overview

VU-NET is Martin Audio's application which is used to connect to iKON amplifiers and a growing number of products including the MLA family, CDD-LIVE!, PSX and DD12. This makes it possible to create a system with products from several different ranges and control and monitor them from a single software platform.

Connection to iKON amplifiers is made over a standard Ethernet network using off the shelf networking products so remote access to control Wavefront Precision systems is extremely straightforward. Complex systems with large numbers of amplifiers can easily be created using standard network switches, the system by default is configured with dynamic IP addressing so DHCP support will be required however a static IP configuration is also easily enabled.

VU-NET is used to upload the presets created using DISPLAY 2.3 into the amplifiers which will automatically create a thumbnail of the Wavefront Precision array that has been designed. Once the array has been created, all of the amplifier functions are available for control to make any changes you may need to routing, crossover point, phase, delay or system EQ. The application has an intuitive GUI making is very quick and easy to get to grips with if you have used any computer-based processing software. Once the system is configured the amplifiers can be kept online to give comprehensive monitoring of the system performance.

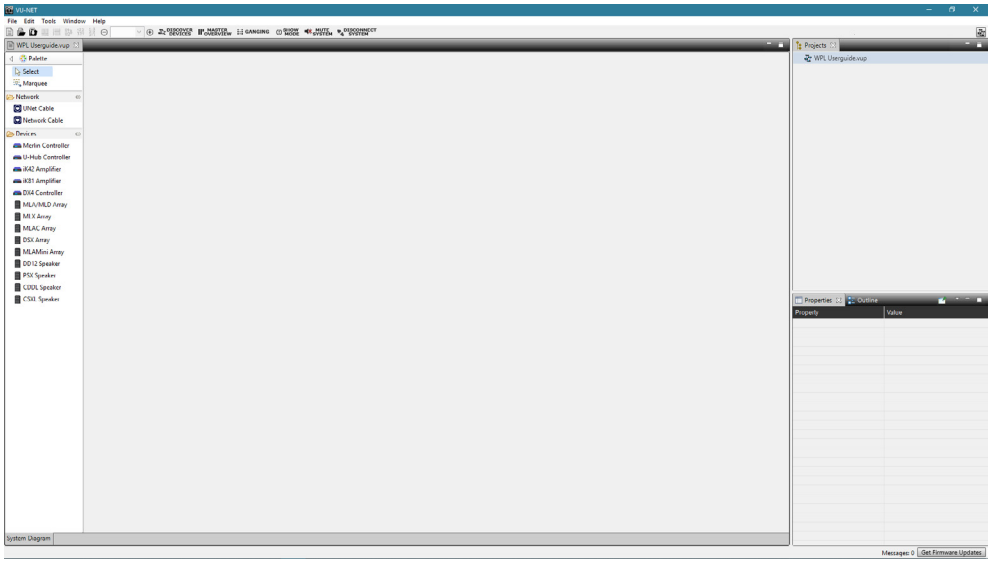

The application opens with a blank system diagram. It is possible to add products manually using the 'Palette' on the left but this has limited use, in practical applications, the 'Discover Devices' button is used.

The application searches the network for all VU-NET enabled devices and will run an installation wizard to add them to the VU-NET project.

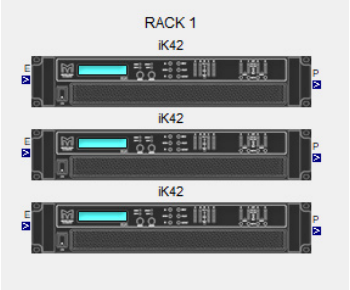

Copyright © 2026 Martin Audio Ltd.

The next stage is to right click on the amplifiers to access the ‘Preset Manager’.

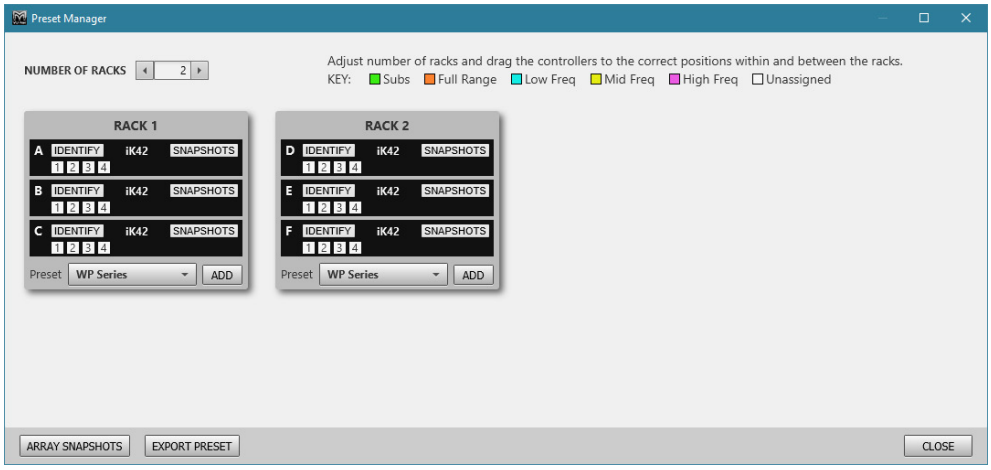

From here the system allows you up upload the D2P file of your system design.

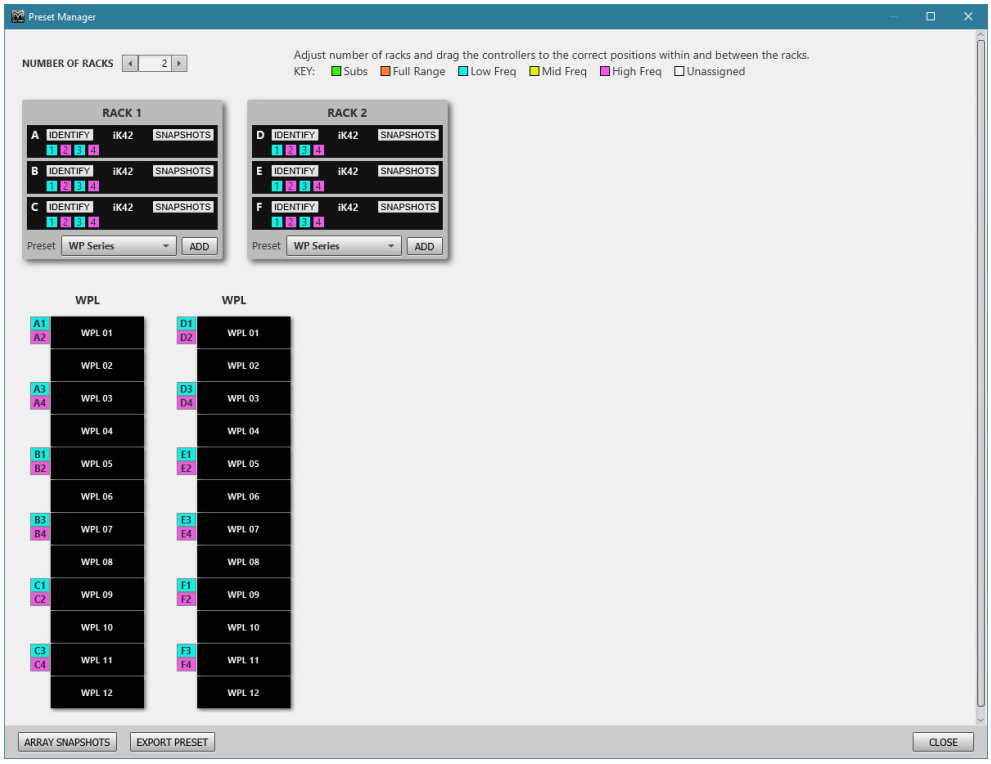

Copyright © 2026 Martin Audio Ltd.

You can now return to the project system diagram, double click on the amplifiers and edit the system to suit your application, perhaps adding some delay to align subwoofers.

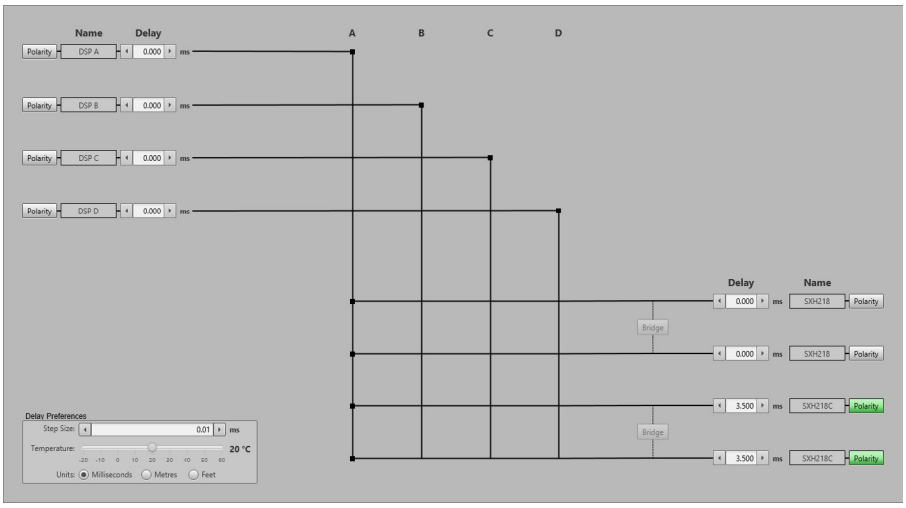

Input EQ can be adjusted to suit your preferences and to compensate for any difficult acoustics.

The output EQ is greyed out as it is used to apply the EQ created by your DISPLAY project, however the high-pass filter is available for adjustment so you can determine the crossover point between the WPL array and your subwoofers.

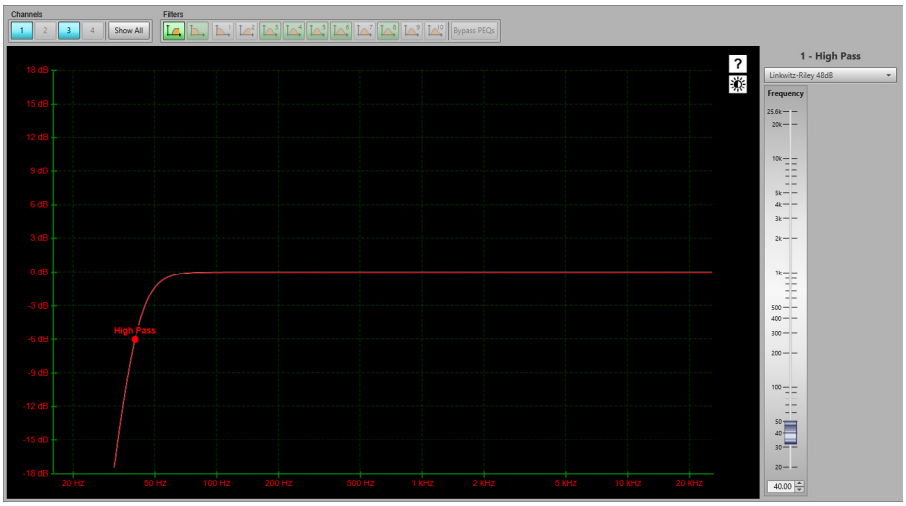

Copyright © 2026 Martin Audio Ltd.

Comprehensive ganging is available so for example you can ensure that stereo arrays remain completely identical.

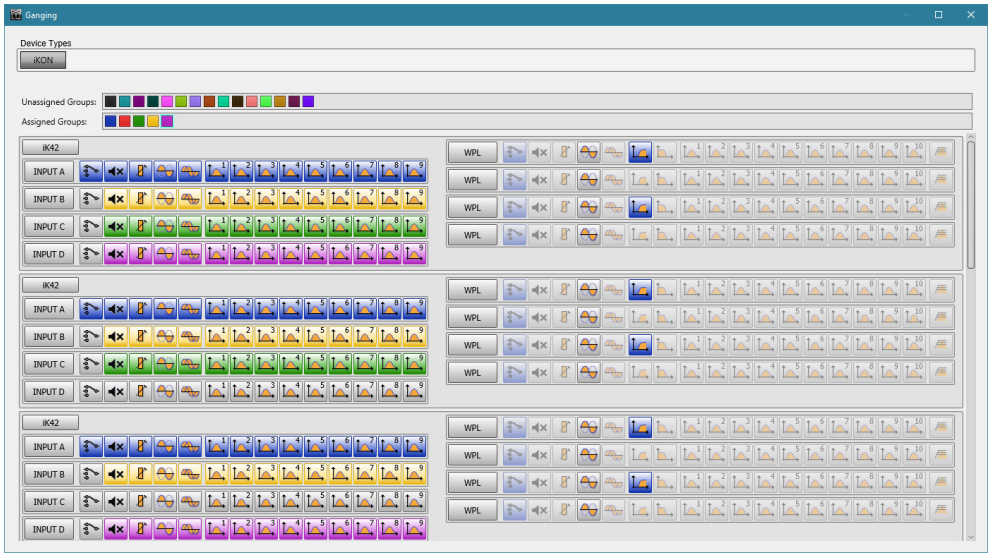

Once the system is configured to your satisfaction the 'Master Overview' gives a complete picture of even the most complex system allowing you to monitor all metering and access commonly needed functions such as gain and mute.

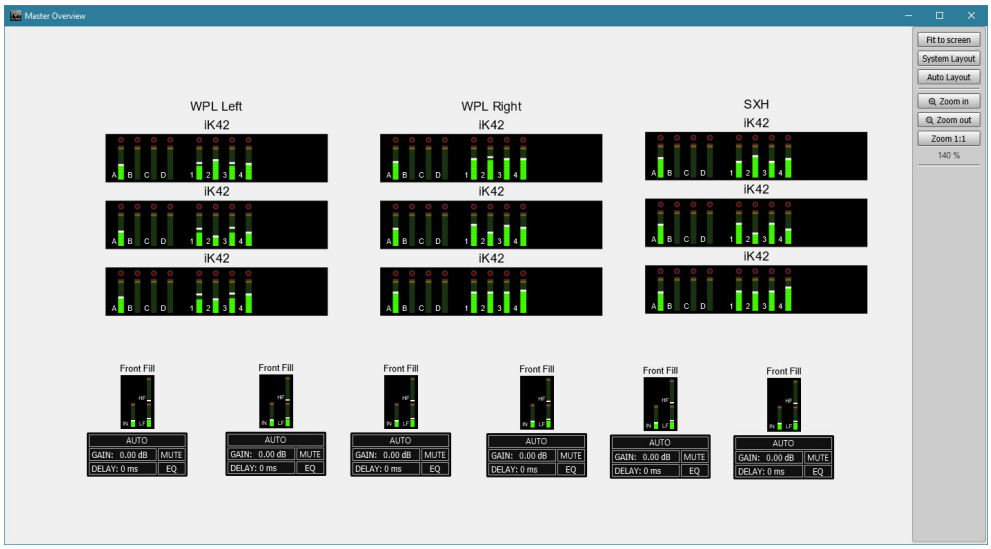

VU-NET is a free download from the software page of the Martin Audio website at www.martin-audio.com/support/software.

It is a comprehensive application with a host of functions to enable control and monitoring of almost every parameter of a system. For full details we would strongly recommend downloading the VU-NET user guide which can be found on the same page as the application download.

Copyright © 2026 Martin Audio Ltd.

Rigging WPL

Overview

WPL's three-point rigging system consists of two rigging points at the front and a single rigging point at the rear of the cabinet. The rear rigging bracket assembly provides eight rigging holes allowing for inter-cabinet angles of 0.5°, 1°, 2°, 3°, 4°, 5°, 6° and 7.5°, as well as STORE, LOCK, and LINK positions, for flying arrays or for use when assembling ground stacked arrays.

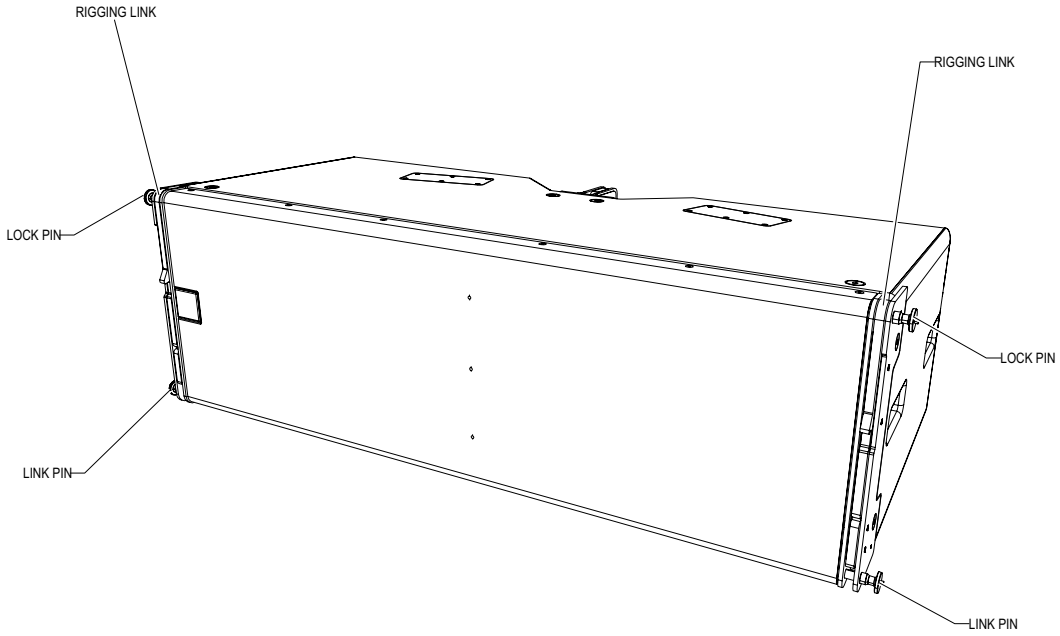

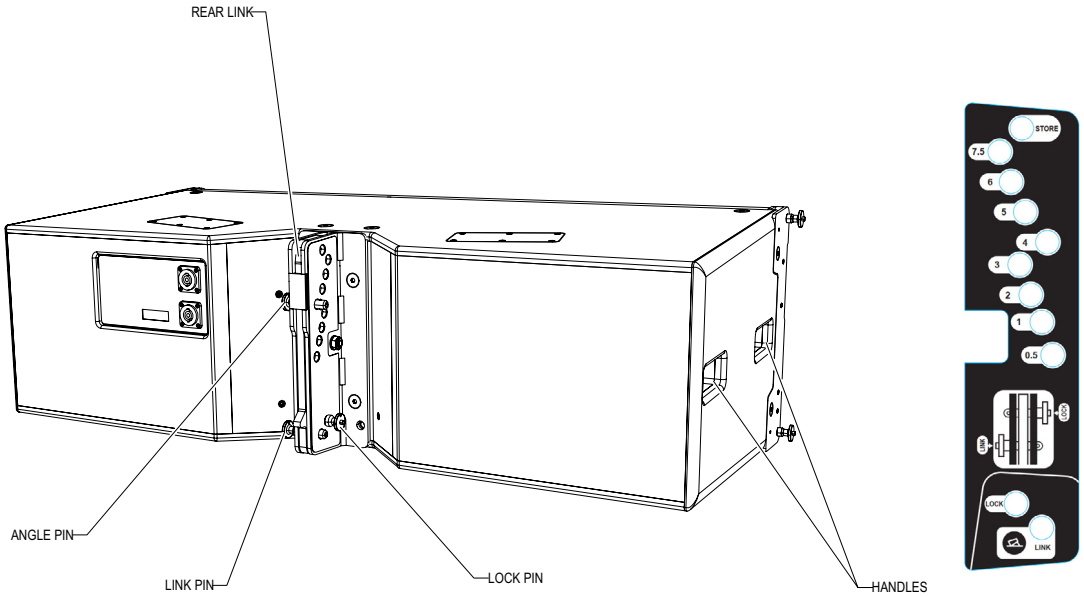

Copyright © 2026 Martin Audio Ltd.

WPL Connections

The WPL has two parallel-wired Neutrik® NL4 connectors on an angled panel at the rear of the cabinet, recessed to avoid damage. Connect speaker cables here.

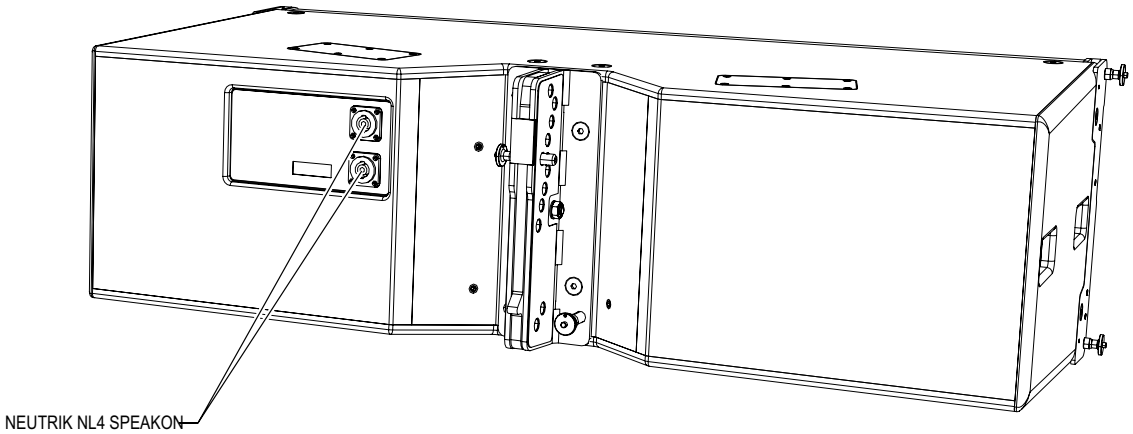

The two NL4s are wired in parallel so either can be used as a nominal ‘input’ or ‘link’ output. Since WPL is a bi-amped system all speaker cables and link cables must utilise 4-core cable. When the system is configured for a single box resolution system each cabinet is connected to two amplifier channels. In two box resolution, connection is made from an amplifier channel to the ‘input’ of one cabinet and the second ‘link’ NL4 is used to make a parallel connection to the adjacent cabinet. The maximum is two box resolution with two cabinets connected to two amplifier channels (one for LF one for HF).

Essential rigging maintenance

You must regularly inspect all rigging hardware for possible faults.

If you find any issues, repair the enclosures. Don’t deploy them until deemed safe by a qualified expert.

The fixings that connect the rigging to the enclosures use internal Binx and Aerotight nuts. These nuts are designed to offer resistance to prevent the bolts from loosening, but they can become loose if the bolt has been adjusted or removed for service. Check that these fixings are tight and if not, do the following;

1. Remove the fixing bolt.
2. Clean the bolt using Loctite SF 7070 and dry.
3. Apply Loctite 243 to the bolt.
4. Fit the bolt.
5. Allow to dry for 24 hours before deploying the enclosure.

Torque setting

The following torque setting is for the bolts that connect the rigging to the enclosures only. Don't use this for any other bolts.

Bolt size	Bracket thickness (mm)	Torque (Nm)
M10	5 at front, 6 at rear	25.0 - 27.0

Copyright © 2026 Martin Audio Ltd.

WPLGRIDt Touring Flying Frame

The touring flying frame is designed to meet BGVC1 and DIN18800 standards, and capable of lifting WPL using either one or two lift points up to a maximum of 24 WPL cabinets allowing both positive (up-tilt) and negative (down-tilt) array tilt angles.

A two-part inclinometer is available for use with the touring flying frame which displays the angle at which the WPL array is flown (relative to the horizontal). It consists of a sensor part number ASM20017 (mounted within the flying frame, one required per grid) and a remote display unit part number ASM20019. Interconnection is via a standard XLR mic cable. A weatherproof 35m (115') cable is available as an optional accessory.

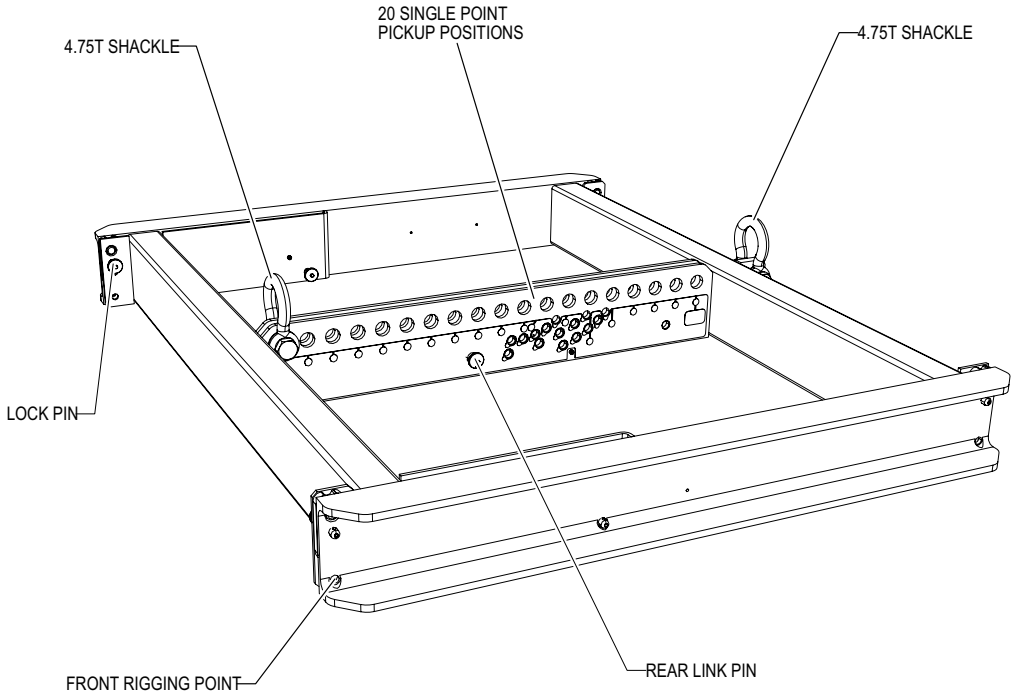

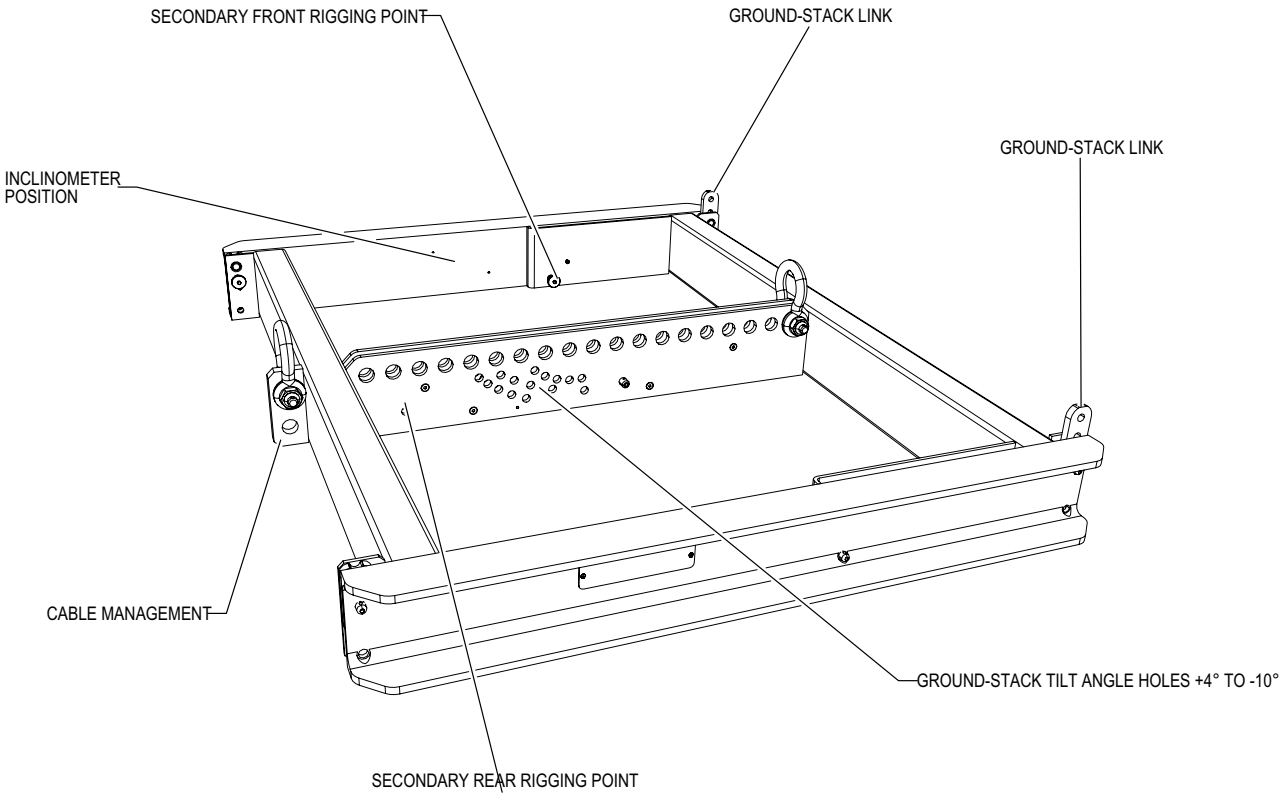

Copyright © 2026 Martin Audio Ltd.

Transport Cart for WPL

An optional, dedicated transport cart (also referred to as a dolly) is available to house an array of four WPL cabinets. This will allow safe transportation and convenient rigging and de-rigging if your system is to be portable.

The latest version of the cart includes castor dishes on the top surface for stacking empty carts.

Safety warning: Do not stack loaded carts.

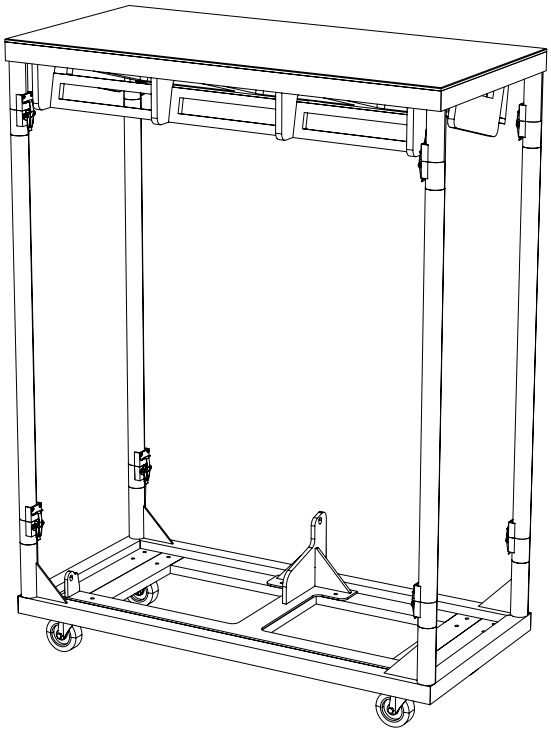

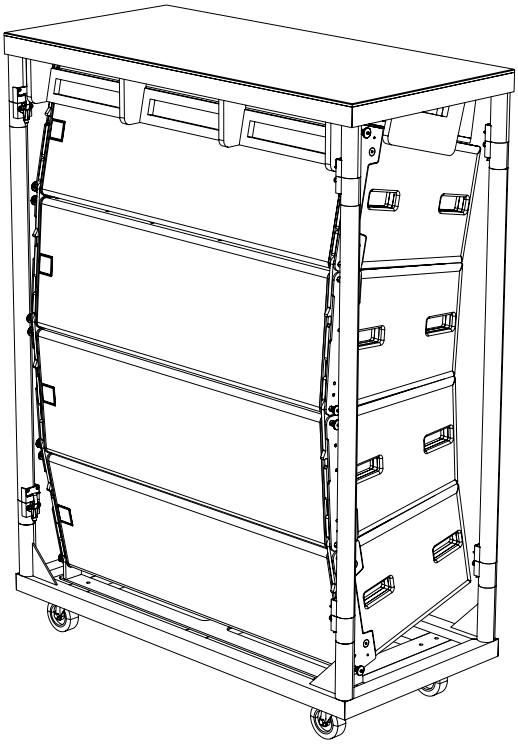

Copyright © 2026 Martin Audio Ltd.

Ground-stack Bar and Outriggers

This precision alignment bar (fig. 9) is used in conjunction with the touring flying frame to define the angle between the WPL array and the flying frame when the system is configured for ground stacking. Depending on where the ground-stack bar is attached to the touring flying frame, a range of aiming angles from +4° to -10° can be achieved.

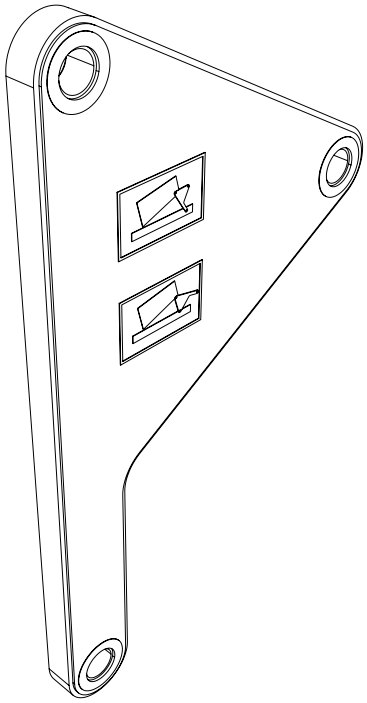

Outrigger brackets are used in conjunction with the flying frame and ground stack bar for ground stacked system applications. These attach to the front of the flying frame to improve stability.

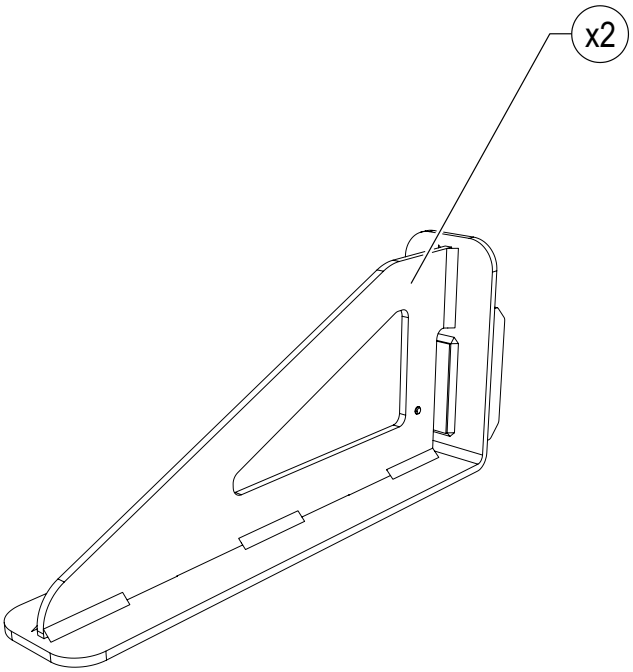

Copyright © 2026 Martin Audio Ltd.

Inclinometer Assembly

Martin Audio supplies an optional remote angle monitoring system which can used to reliably check the angle at which the WPL array is flown (relative to the horizontal). It consists of a sensor (mounted within the flying frame) and a remote display unit. Interconnection is via a standard XLR mic cable.

Fitting the inclinometer sensor to the flying frame

The WPL touring flying grid may be fitted with an inclinometer sensor which is available as an optional accessory part number ASM20017. Once coupled with the ASM20019 inclinometer read-out display via a standard 3-pin XLR mic cable, precise measurements of the angle of the array can be taken to ensure that the DISPLAY optimisation is as accurate as possible.

The touring flying frame part number WPLGRIDt has a mounting bracket with M4 threaded holes ready to accept the sensor.

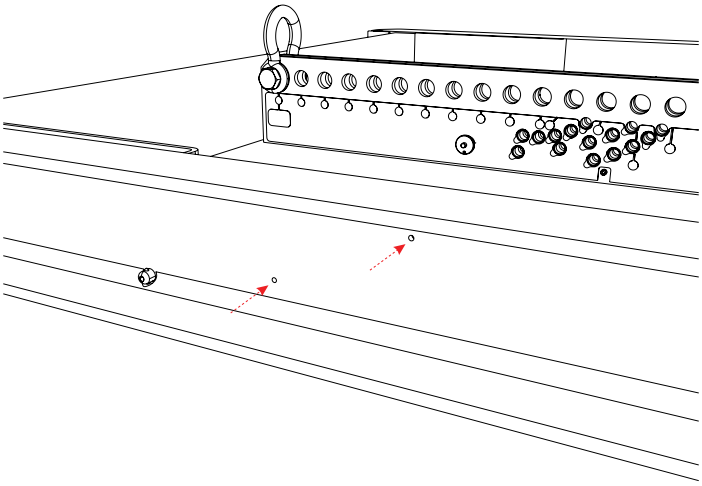

The sensor is housed in a rugged weatherproof diecast aluminium enclosure. Fitting the sensor is a very quick and easy job requiring just two tools, a 3mm allen key (wrench) and a PZ2 Pozidrive screwdriver.

Remove the lid

The sensor is attached to the grid with two M4 cap head screws which have to be inserted through pre-drilled holes in the box. To access these it is necessary to remove the lid of the box.

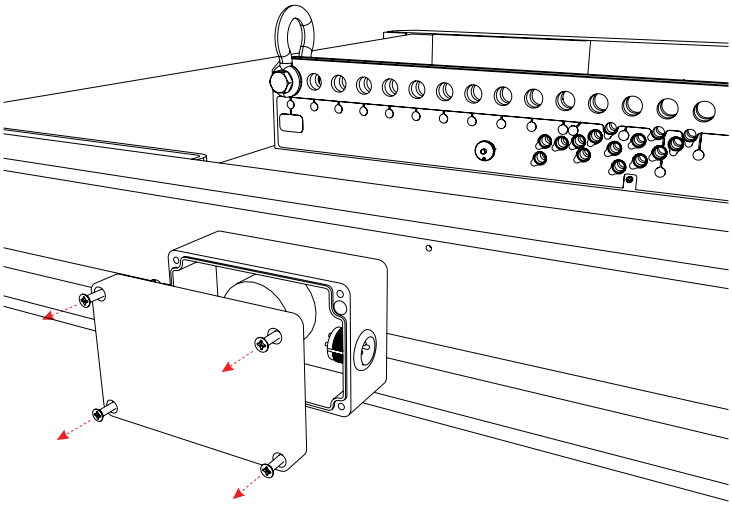

Copyright © 2026 Martin Audio Ltd.

Using the PZ2 Pozidrive screwdriver, unscrew all four lid screws until the lid can be removed from the base of the box. Note that the screws do not have to be completely removed from the lid, they can remain captive in the lid to prevent them getting lost.

Attach the box to the grid

Position the box on the outside of the bracket on the left side of the grid. There are two M4x20mm cap head screws supplied with the sensor. These go through the holes in the bottom left and top right of the box into the threaded holes in the grid bracket. Tighten using an M3 allen key to ensure a tight fit.

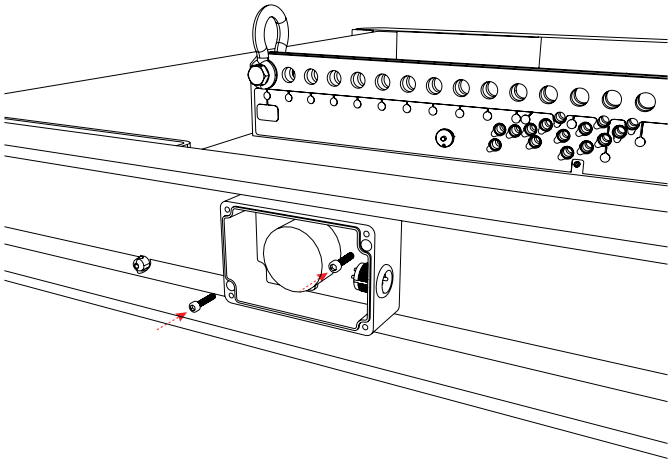

Re-fit the lid

The lid can be re-fitted, check that the gasket on the underside of the lid edge is intact to ensure that the lid is sealed once screwed in position. Note that the design of the box is such that the mounting and lid screws are positioned outside the lid gasket to ensure that there will be no moisture ingress through their holes. All screws are stainless steel to avoid corrosion when used outdoors.

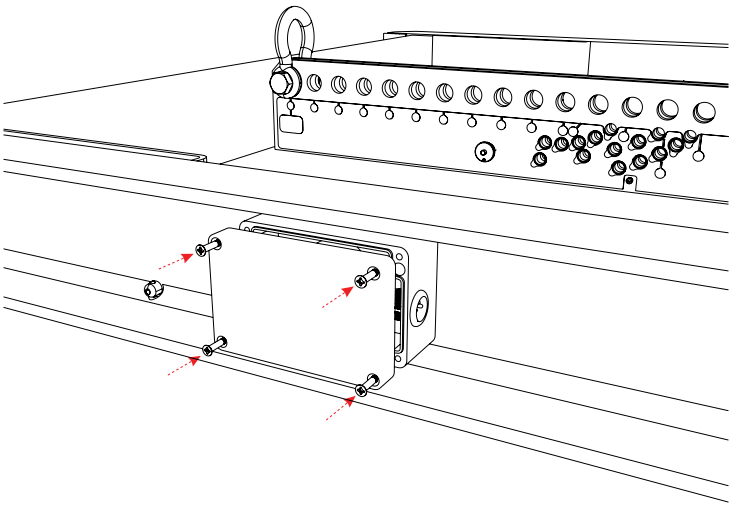

Copyright © 2026 Martin Audio Ltd.

Sensor in position

The sensor is now ready for use. It is entirely passive so needs no power supply or batteries (the read-out display requires two PP3 batteries). It can be connected to the read-out sensor with a standard 3-pin XLR mic cable of any length.

Martin Audio supply a cable designed specifically for use with the inclinometer system, part number PWA00057. This is a 35m cable using high grade AES spec microphone cable fitted with male and female Neutrik NC3XX-HD connectors which are extra rugged and have an IP rating of IP67 to enable use outdoors in all weather conditions.

Note that a single ASM20019 read-out display can be used with any number of sensors. It is not necessary to have the same number of displays as sensors. One display can be plugged into each inclinometer cable, one at a time to take a reading of the angle before entering the figure into the DISPLAY project.

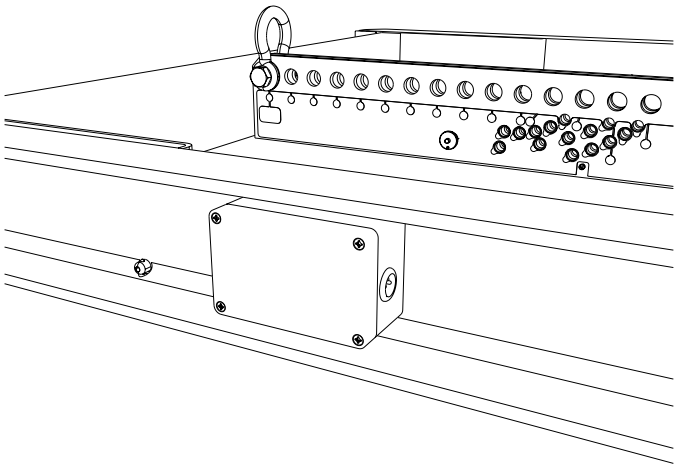

Copyright © 2026 Martin Audio Ltd.

Flown Systems

WPL uses a three-point rigging system. The mechanical load of the array is taken through the side-mounted steel rigging strips which securely connect one cabinet to the next, while the best possible coupling between cabinets is ensured by means of the rear rigging points which allow a range of angle adjustment from 0.5° to 7.5°.

The cabinets are joined using machined quick release rigging pins. These have spring loaded ball bearings at the end of the pin which protrude beyond the outer diameter of the pin thus locking them in place.

To release them, the central button is depressed.

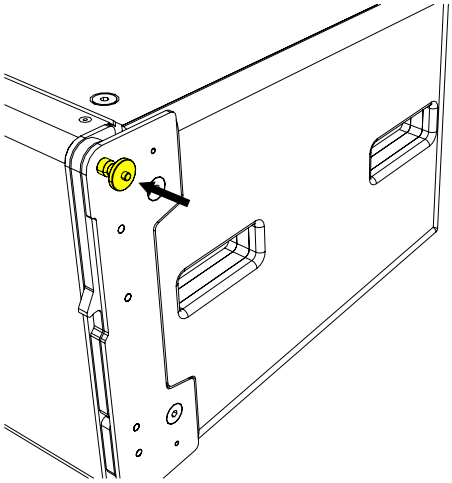

Pull the pin clear using the wide flange whilst your thumb depresses the central button.

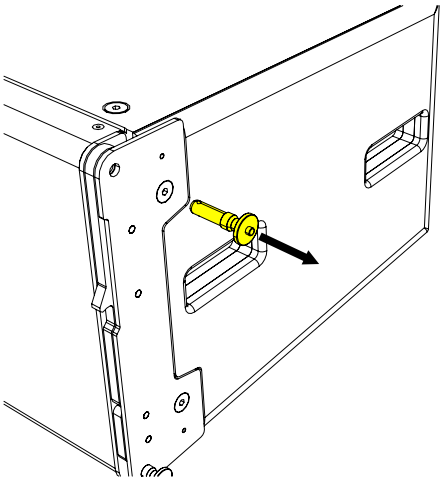

When using the pins to link cabinets, the central button must again be depressed so the pin can be pushed into position.

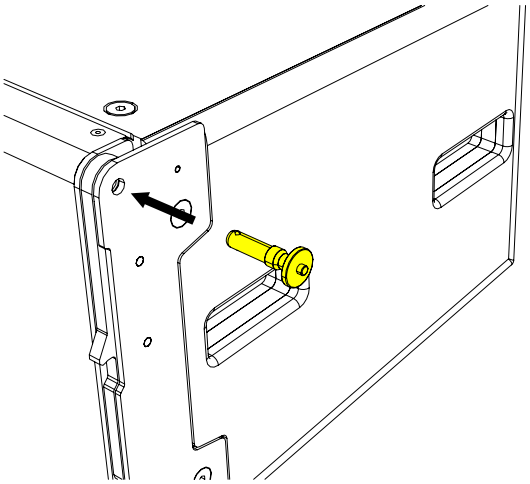

It is important to check that the central button does not remain depressed once you have put it in place as this would indicate that the pin has not been pushed all the way into position and the ball bearings at the end of the pin have not been able to pop out and rigging the pin in place. If the pin is not locked the array is unsafe. The pin MUST be repositioned until it is securely locked in place.

Copyright © 2026 Martin Audio Ltd.

The front flying brackets are stored in the transit position and secured with rigging pins. Remove the pin on each side and raise the rigging bracket, then secure in the raised position by replacing the rigging pins.

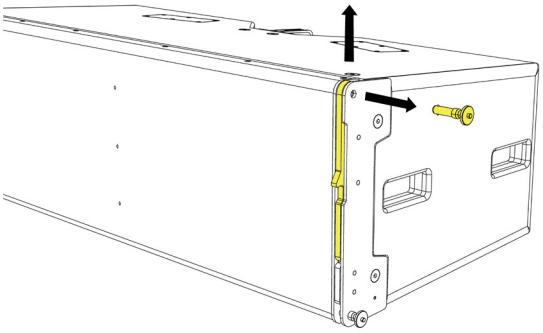

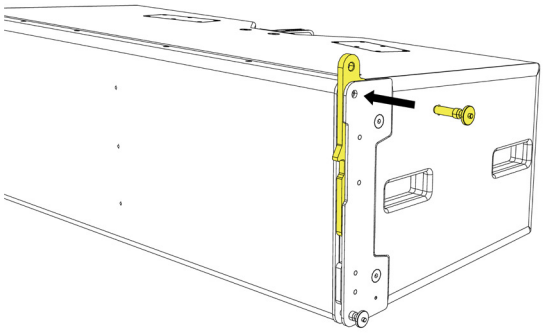

Inter-cabinet angles are set using the rear rigging assembly. This consists of a sliding drop link bar with indexed holes which can be slid vertically upwards between the two constraining steel brackets, and secured with the rigging pins in one of several different positions determined by the holes in the rear bracket assembly, allowing inter-cabinet angle adjustment in eight incremental steps of 0.5°, 1°, 2°, 3°, 4°, 5°, 6° and 7.5°.

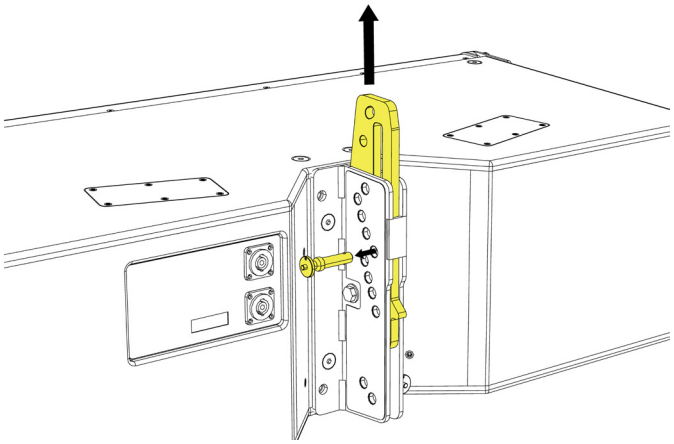

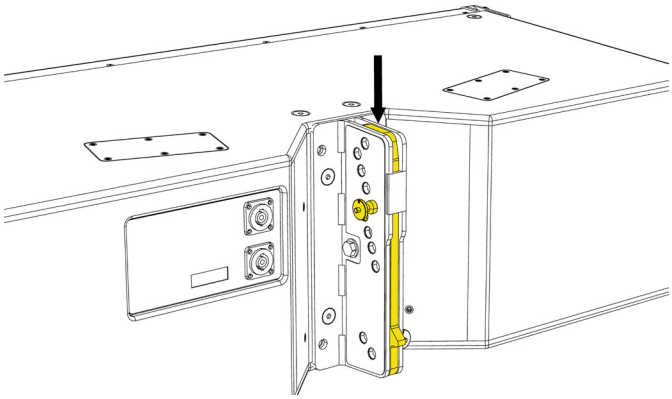

Copyright © 2026 Martin Audio Ltd.

Rigging WPL with WPLGRIDt

WPL cabinets conveniently truck fully enclosed in a custom designed transport cart (also referred to as a dolly), preconfigured in blocks of four, and are rigged straight out of the transport cart to provide an extremely fast and streamlined process.

The cabinets travel in the transport cart at maximum curvature. The transport cart is manufactured around a welded aluminium frame with timber inserts coated in textured paint. It has a shaped timber base with nylon skids to support the cabinets which are attached to the base with rigging pins front and back. There are rubber pads on the underside of the top to hold the four cabinets securely when in transit. After removing the top of the transport cart and the supporting poles, the WPL array is easily accessible for rigging. Rigging pins are inserted at the holes required for the cabinet angles as predicted by your DISPLAY 2.3 project. The array is then lifted so that the angles open until the rear rigging reaches the stops limited by the rigging pins at the preset angles. A second rigging pin is put in place on each cabinet to lock the angles so the array can't collapse back down.

Once the array is flown out of the transport cart, the poles can be placed in the bottom section and the top latched on to the base keeping it compact for storage.

IMPORTANT SAFETY NOTES

The transport cart must not be moved side-on as there is a danger it could tip, particularly on loading ramps. The cart must only be moved as shown in the figure on the left below, NOT as in the figure on the right.

Do not stack loaded carts.

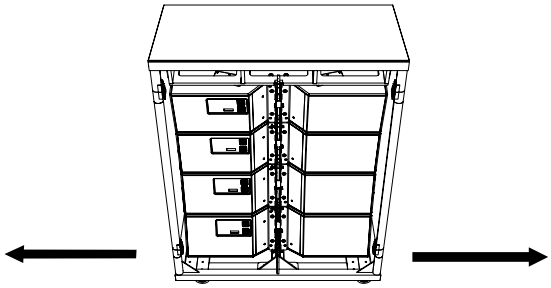

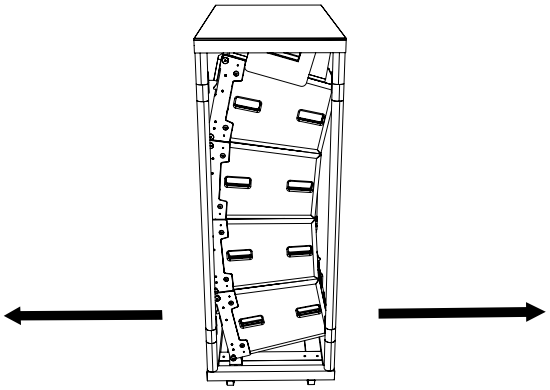

The following example illustrates the procedure for rigging an array of 8 WPL cabinets with the WPLGRIDt touring flying frame. A maximum of 24 WPS cabinets may be flown using the WPLGRIDt.

Wheel a WPL transport cart complete with four cabinets into place and position it under the chosen rigging point.

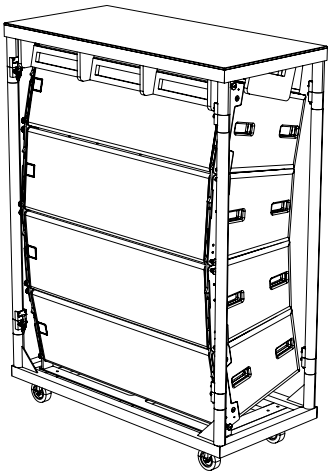

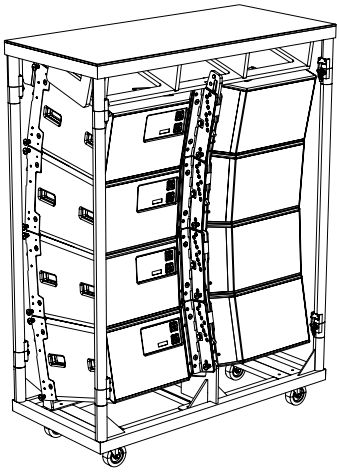

Copyright © 2026 Martin Audio Ltd.

Unlatch the top from the supporting poles in four places, lift it off and set it aside.

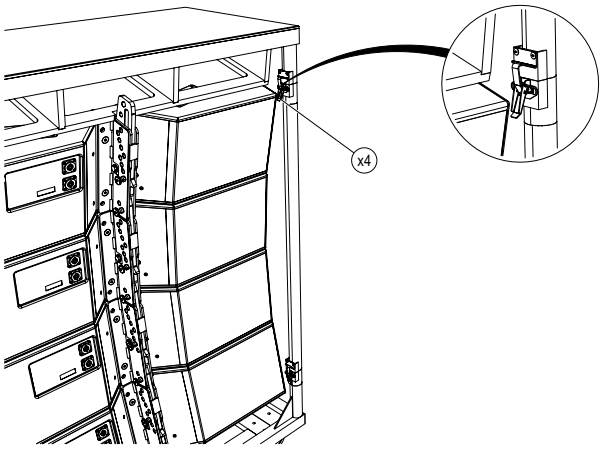

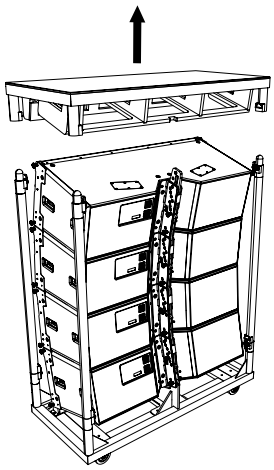

Unlatch the supporting poles from the transport cart tray and lift them off.

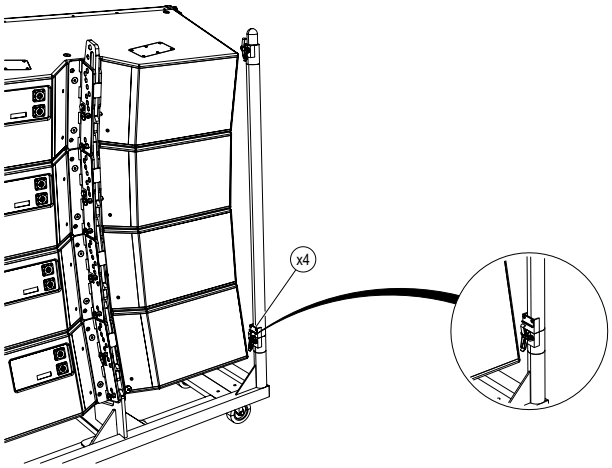

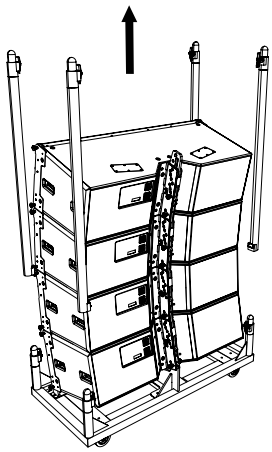

With the supporting poles removed from the transport cart the inter-cabinet angles should now be checked or, if not already preselected, set them now according to the predictions from your DISPLAY 2.3 project.

Copyright © 2026 Martin Audio Ltd.

Lift the front rigging brackets on the left and right of the top WPL in the cart and pin in position.

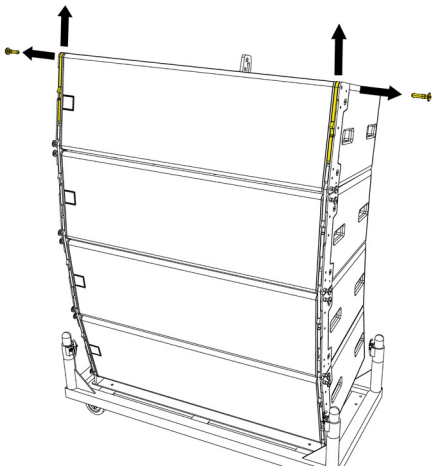

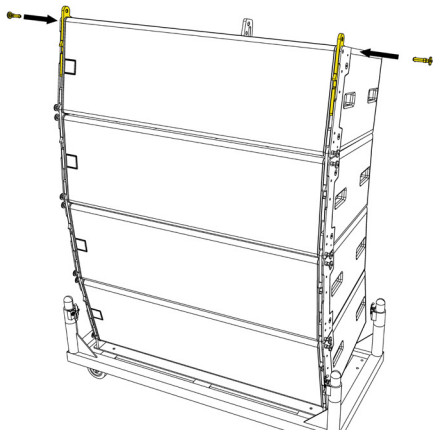

Place the WPLGRIDt flying frame on the top cabinet in either the front or rear position as determined by the DISPLAY 2.3 project. Most arrays will use the front rigging position, the rear position is required when the array has an excessive up-tilt.

Insert a rigging pin at the front rigging position on each side.

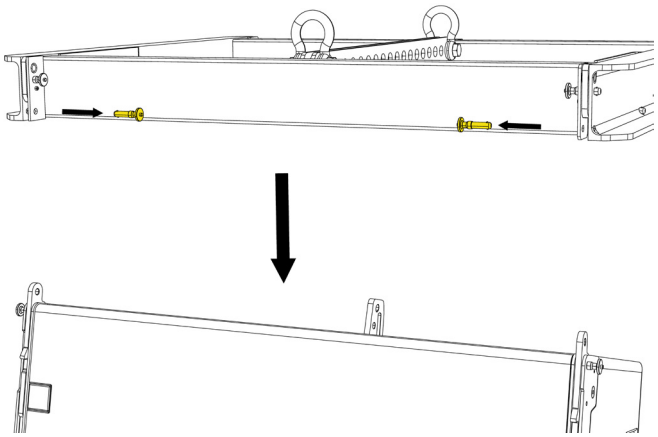

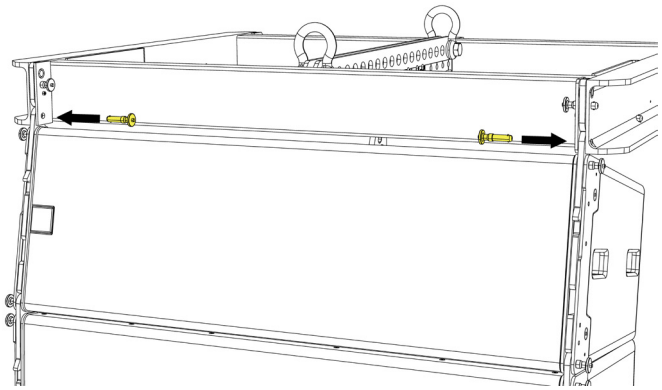

Attach the drop link from the rear of the top cabinet to the flying frame at the LINK position.

Insert a rigging pin at the LOCK position.

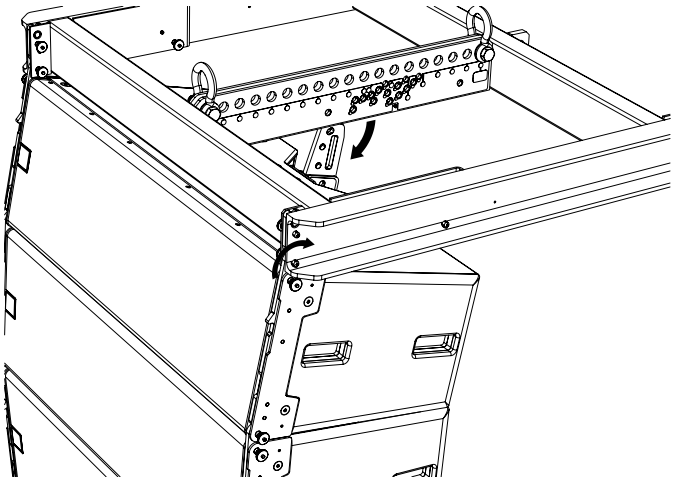

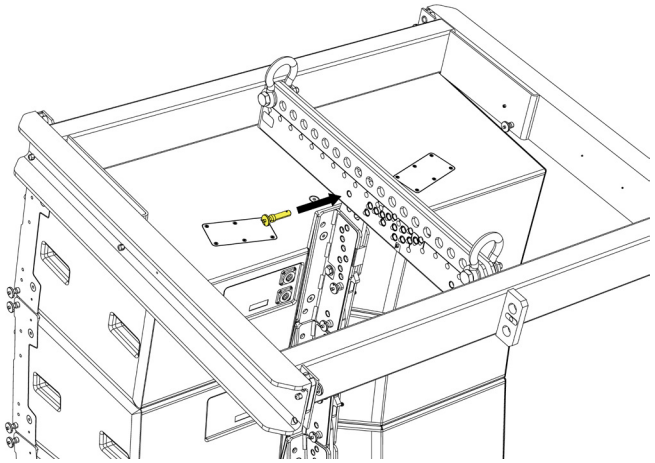

Copyright © 2026 Martin Audio Ltd.

Lift the array until the transport cart is just clear of the ground. As the array goes up the cabinets will open up to the angles that you have preselected from the DISPLAY 2.3 project prediction. Insert a further rigging pin at the LOCK position on each cabinet to lock the inter-cabinet angles. At this stage the cable loom should be attached to the grid and the first four cabinets connected. As more cabinets are added they should be connected to the loom and link cables between cabinets connected where required. Cables are not shown for clarity.

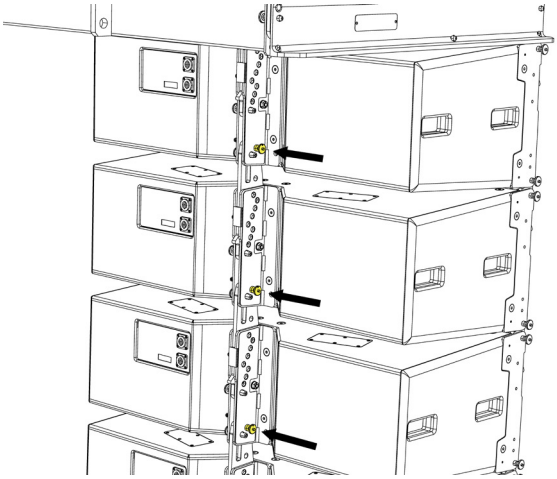

Support the rear of the cart and remove the rear pin holding the cart to the array.

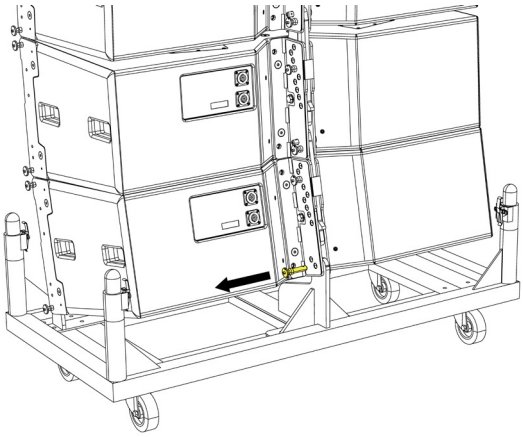

Lower the back of the cart to the ground.

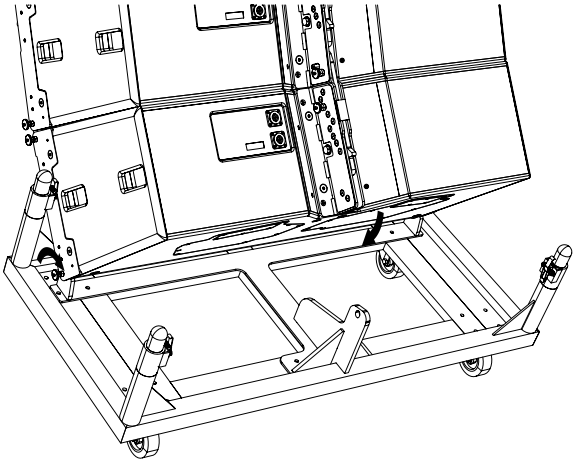

Repeat at the front of the array supporting the cart and removing the pins holding the cart to the array.

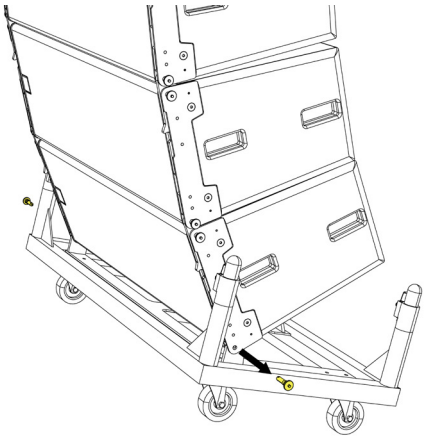

Copyright © 2026 Martin Audio Ltd.

Once the cart is removed the four supporting poles can be placed in the base and the top fitted directly to the base and the two clipped together. The assembly can now be moved to a suitable location for storage.

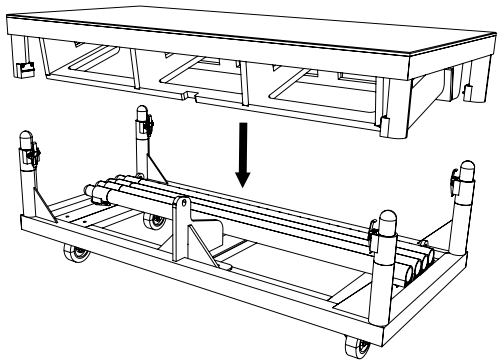

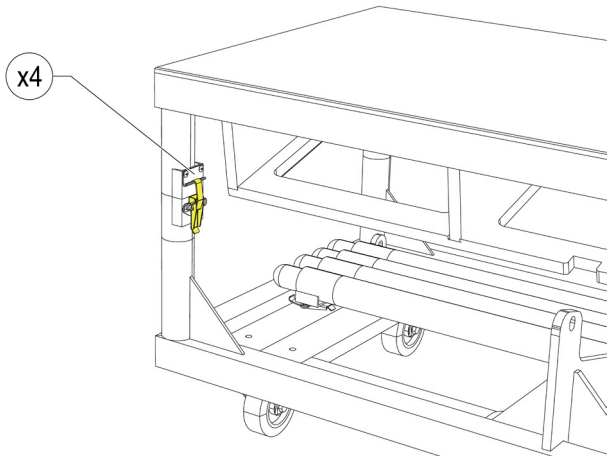

Lift the array to a height where a second cart can be placed underneath.

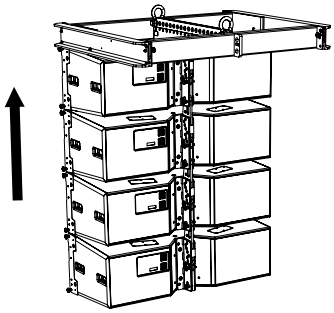

Position a second loaded WPL transport cart underneath the array, remove the top and poles and prepare the cabinets to be added to the array.

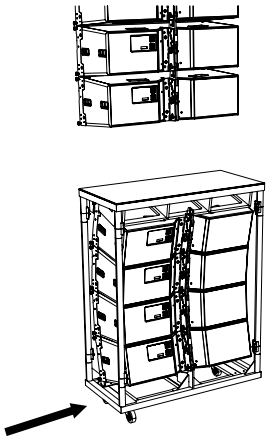

Unlatch the top from the supporting poles in four places, lift it off and set it aside.

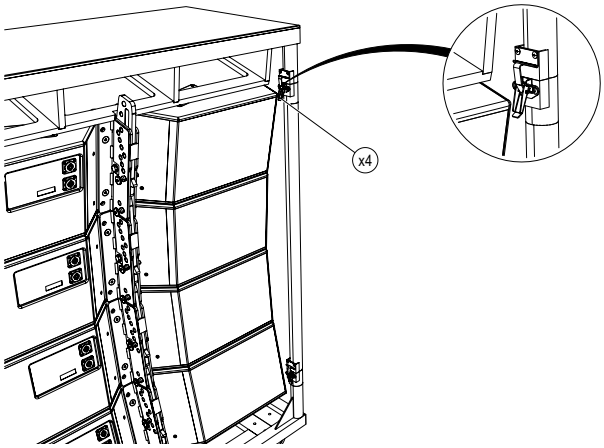

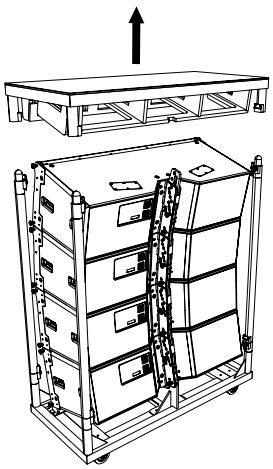

Copyright © 2026 Martin Audio Ltd.

Unlatch the supporting poles from the transport cart tray and lift them off.

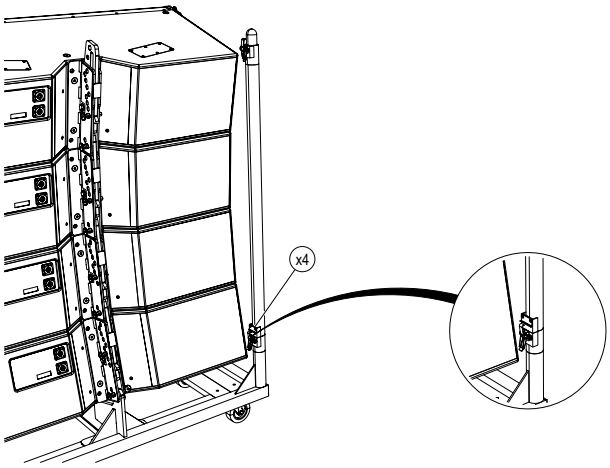

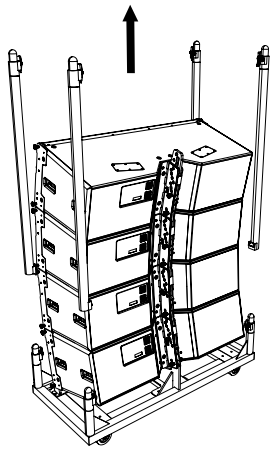

Preselect the inter-cabinet angles on the lower three cabinets according to the predictions from your DISPLAY 2.3 project.

Remove the rigging pins.

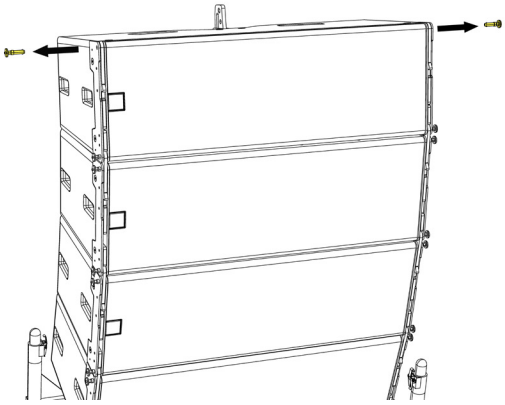

Lower the array and align the front rigging points of the fourth cabinet with the front rigging points of the fifth cabinet.

Raise the front rigging brackets on the fifth cabinet and insert a rigging pin on both sides in the fourth cabinet.

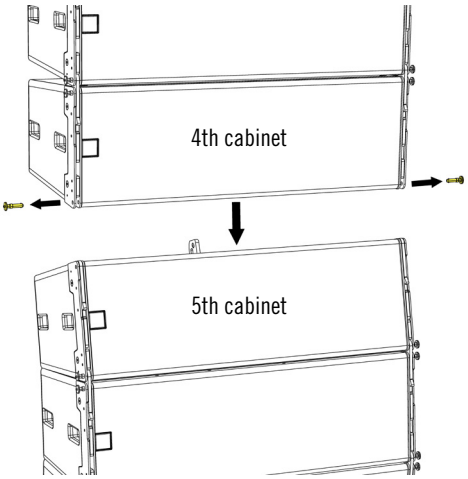

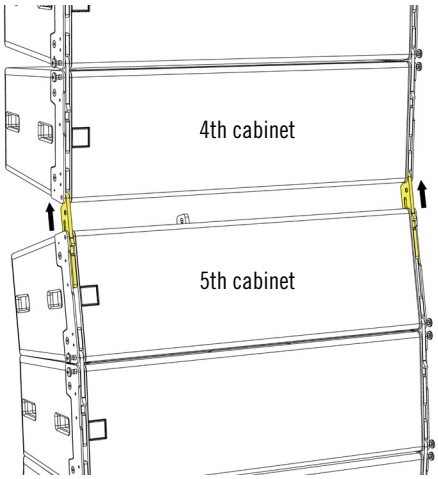

Copyright © 2026 Martin Audio Ltd.

Insert the front rigging pins into the fifth cabinet.

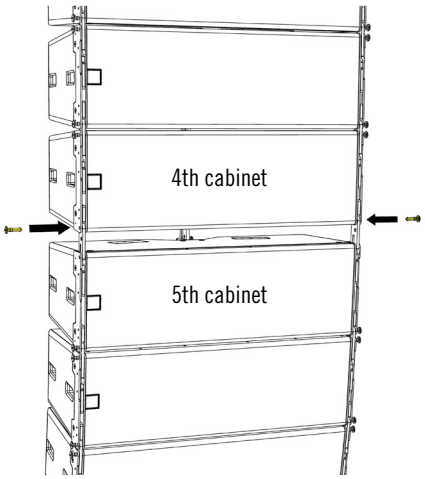

Insert front rigging pins in the fifth cabinet.

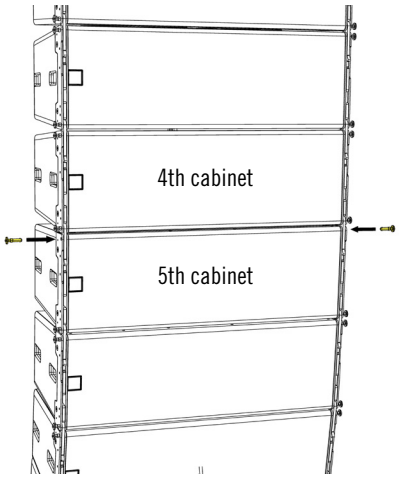

The cabinet angles will open as far as the pins will allow to the angle that has been pre-selected. Insert rigging pins at the LOCK position on the remaining cabinets.

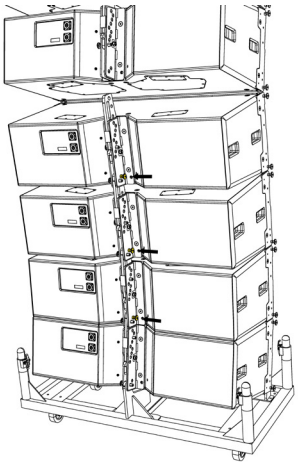

Lower the upper array.

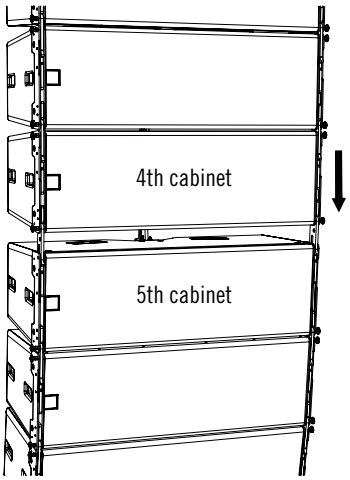

Raise the array clear of the transport cart, allowing access to the rear of the array.

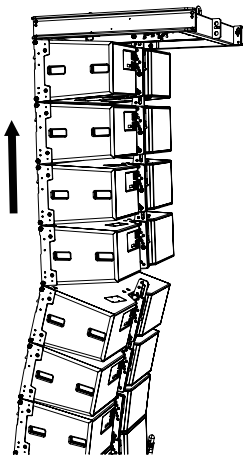

Swing the bottom four cabinets (which will now be a rigid array due to the rigging pins) backwards until butted against the upper half of the array.

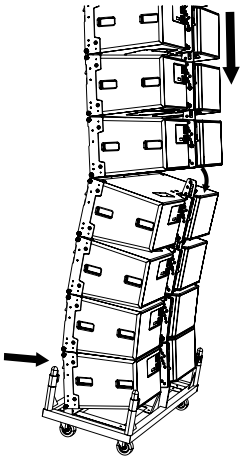

Copyright © 2026 Martin Audio Ltd.

Insert a pin in the rear rigging bracket at the correct angle. Allow the bottom four cabinets to swing back down and insert rigging pins into the LINK and LOCK positions on the fourth cabinet. Connect the cable loom and any link cables as required to the lower four cabinets.

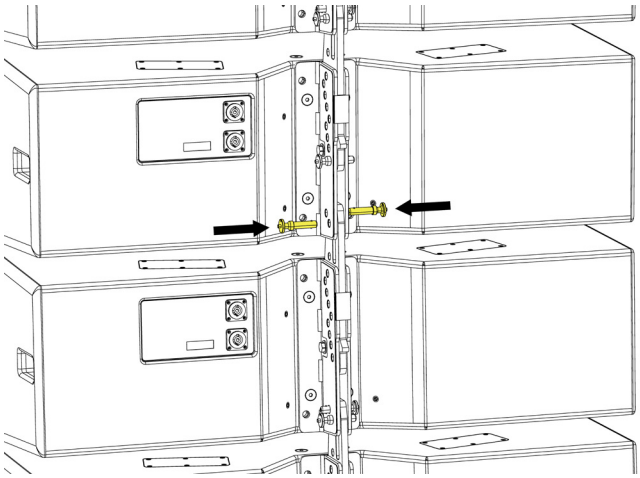

Support the rear of the cart and remove the rear pin holding the cart to the array.

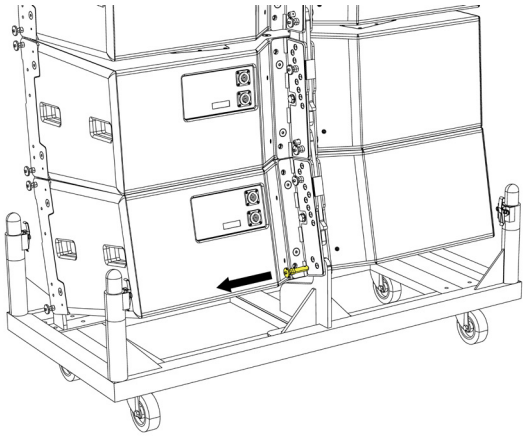

Lower the back of the cart to the ground.

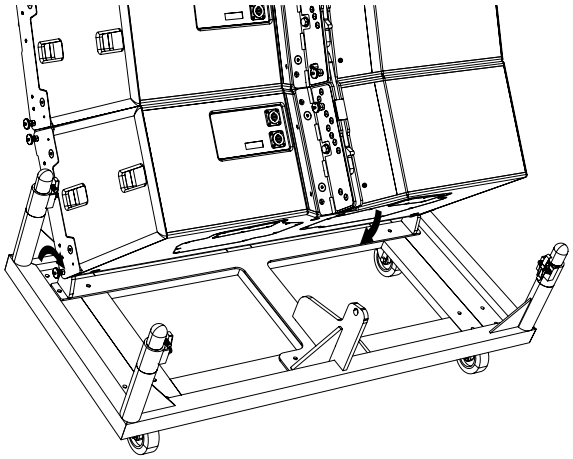

Repeat at the front of the array supporting the cart and removing the pins holding the cart to the array.

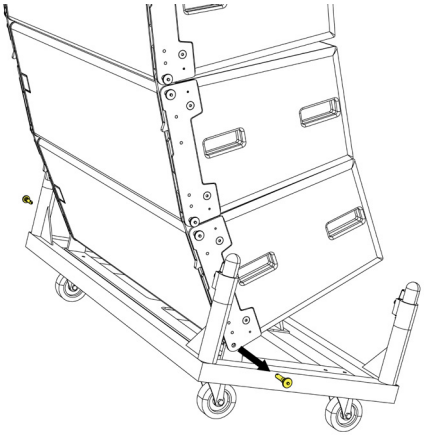

Raise the array to the final trim height. The use of either one or two motors allows both negative (down-tilt) or positive (up-tilt) array angles to be easily achieved.

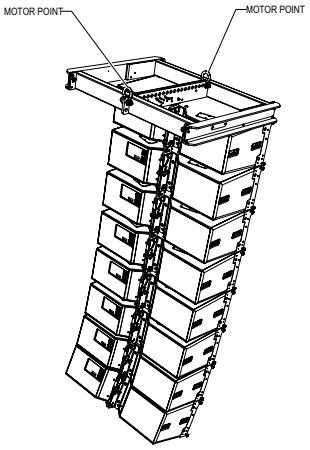

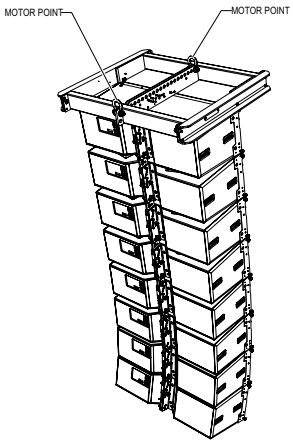

Copyright © 2026 Martin Audio Ltd.

Stow the supporting poles in the tray of the transport cart, replace the top and secure the clips.

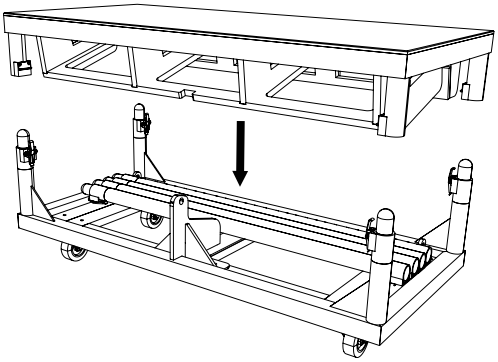

Copyright © 2026 Martin Audio Ltd.

Landing the Array

Landing an array is simply a reversal of the rigging procedure outlined above, lowering the array and guiding the bottom four cabinets into a WPL transport cart, unpinning the lower block of four, and repeating with the top four cabinets. Lower the array to a convenient working height. Disconnect the speaker cables. Position a WPL transport cart underneath the array and remove the top and supporting poles.

Lower the array until it is just above the cart.

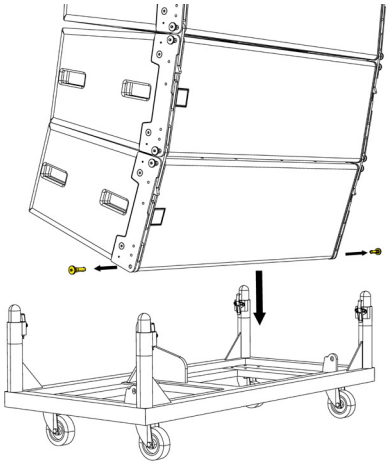

Raise the front of the cart and pin it in position to the front of the array.

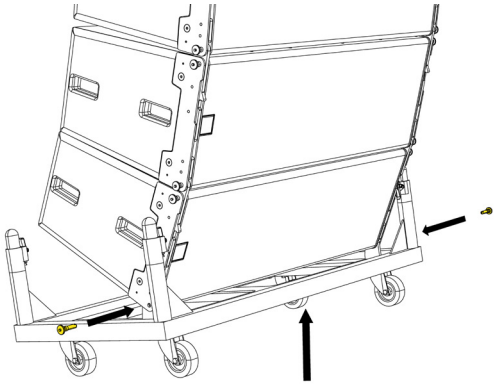

At the back of the array raise the cart.

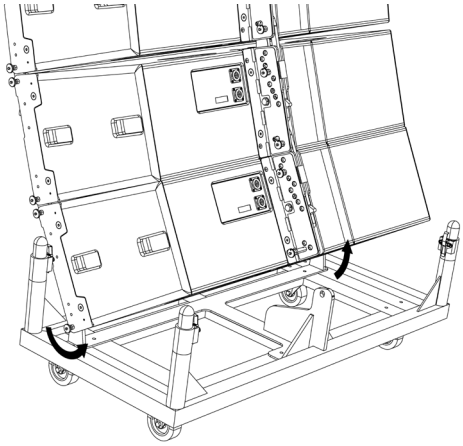

Pin the cart to the rear rigging bracket of the array.

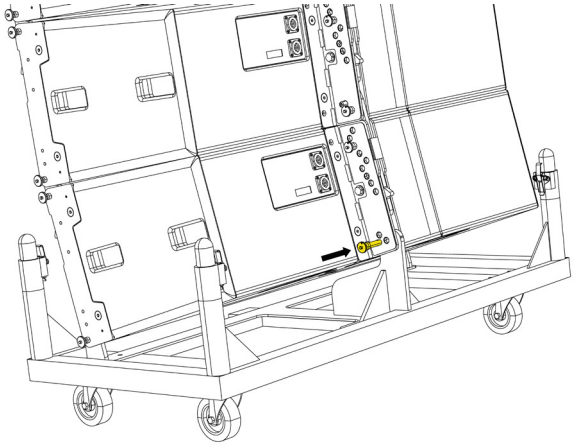

Remove the LOCK rigging pins from the rear rigging bracket on the bottom four cabinets.

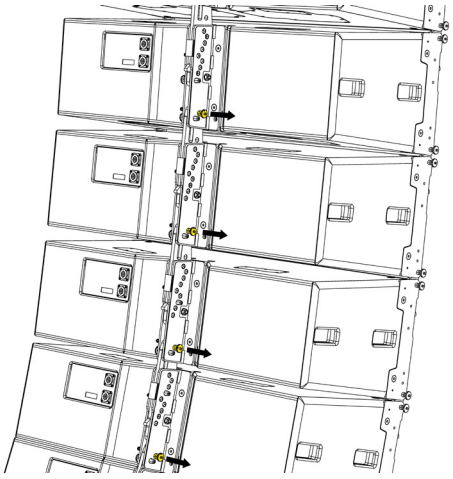

Lower the array until the cart is on the ground taking the weight of the array allowing the cabinets to collapse down until the trapezoidal sides are touching.

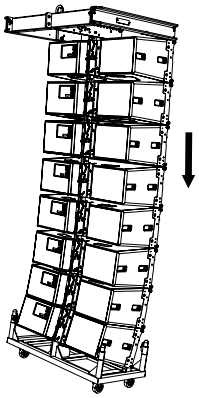

Copyright © 2026 Martin Audio Ltd.

Carefully unpin the fifth cabinet from the fourth cabinet at the rear by removing the LINK pin, be aware that the array may swing when this is done.

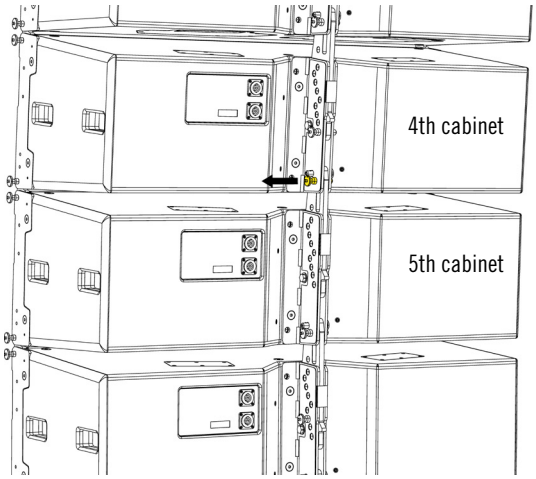

Remove the front rigging pins from the front of the fifth cabinet at each side. Ensure the cart is fully grounded when removing pins.

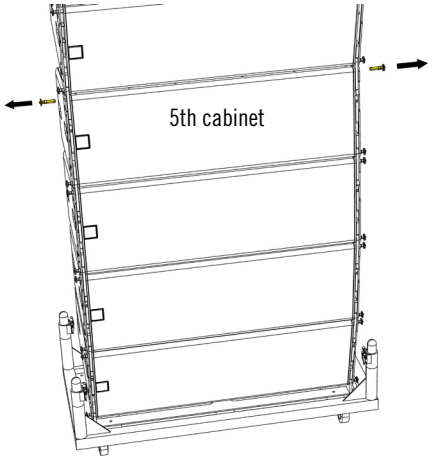

Remove the front link pins. The front links will then drop down.

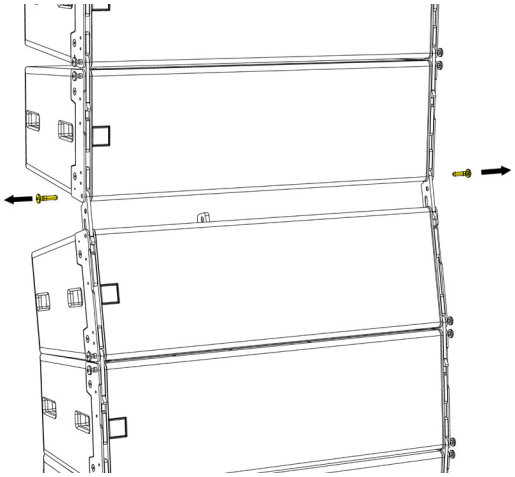

Lower the array down so that the cart meets the floor.

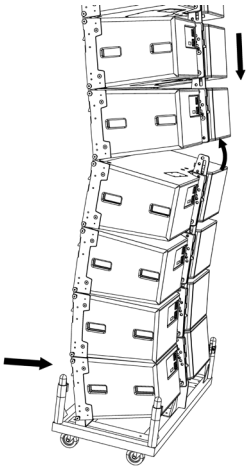

Lift the array a fraction so that there is no weight on the front rigging brackets.

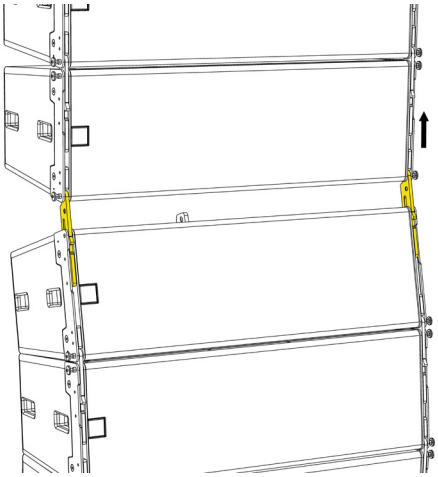

Lift the remaining array cabinets away from the cart.

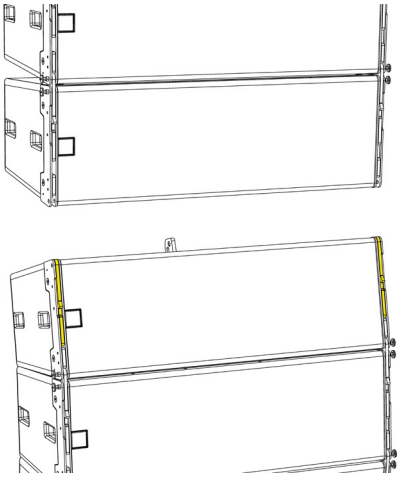

Copyright © 2026 Martin Audio Ltd.

Replace the front rigging pins in into the cabinet.

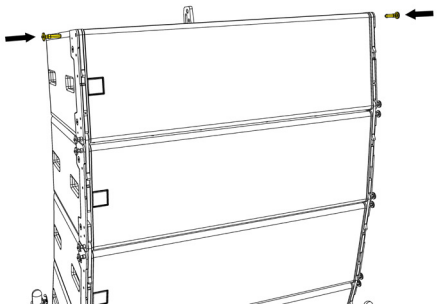

Replace the supporting poles and top into the base of the WPL cart.

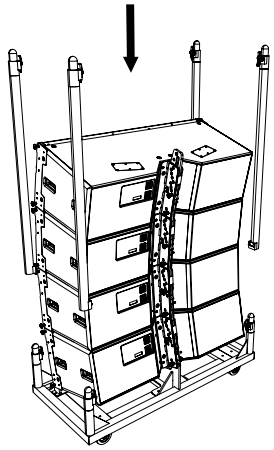

Replace the lid of the WPL cart.

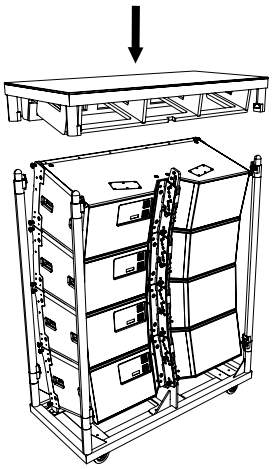

Lower the remaining four cabinets and repeating the procedure above, lowering the array into a transport cart.

Copyright © 2026 Martin Audio Ltd.

WPL Flown with SXHF218

The SXHF218 is a touring grade subwoofer that can be flown above within the same array and to the side and behind WPL as a separate array to increase the low frequency extension of your system. Refer to DISPLAY software for rigging limitations.

Using one or two motors position a WPLGRIDt above the SXHF218 and lower it onto the enclosure.

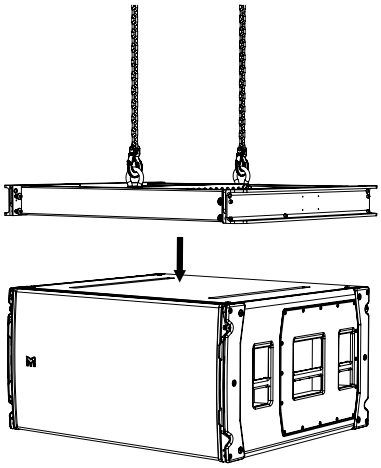

Remove the 4 link pins from the WPLGRIDt and also remove the 4 pins from the from SXHF218 to release the links. Rotate the SXHF218 links and line them up with the pin holes in the WPLGRIDt.

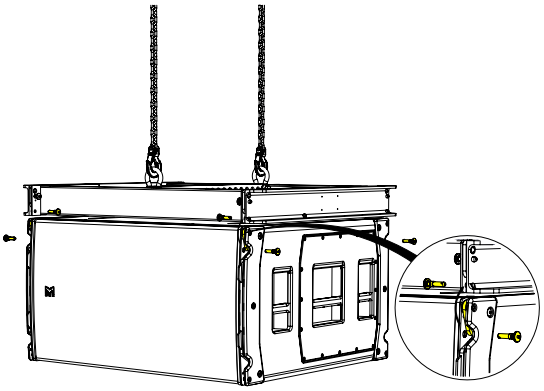

Replace the WPLGRIDt pins to link the SXHF218 securely to the WPLGRIDt. The SXHF218 pins for the first cabinet are not needed in this configuration and can be placed back in the stowed position.

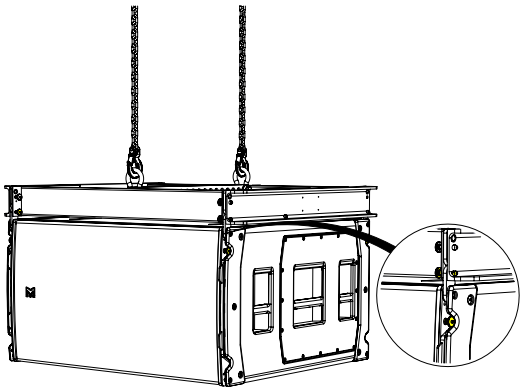

Raise the WPLGRIDt and SXHF218 to a height suitable to fit another SXHF218 below the array, lower it making sure the protective nylon skids line up and fit into the recessed channels on the SXHF218 below.

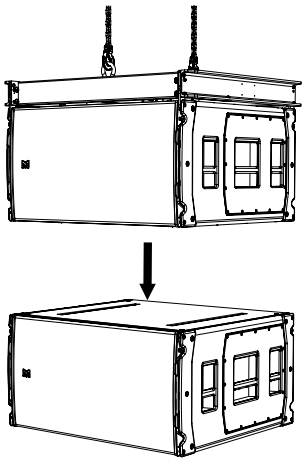

Copyright © 2026 Martin Audio Ltd.

Remove the pins from the stow position, rotate the links to line up with the pin hole position on the SXHF218 above.

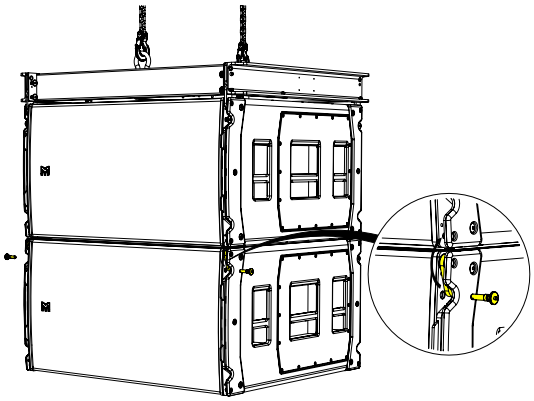

Replace the pins into the lock position on the cabinet above making sure all four links are securely attached. Repeat the process until the correct amount of SXHF218's are flown.

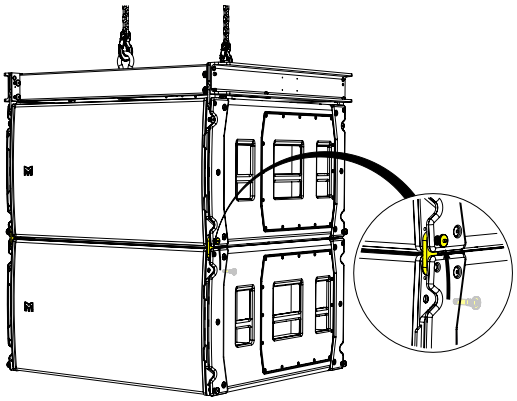

Raise the array to a height suitable to place a second WPLGRIDt below the array, align and lower the array onto the WPLGRIDt.

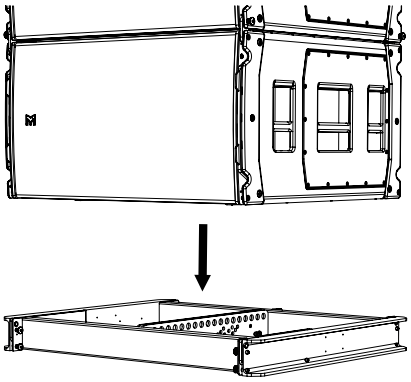

Remove the pins from the stow position, rotate the links to line up and align with the pin hole position on the SXHF218 above.

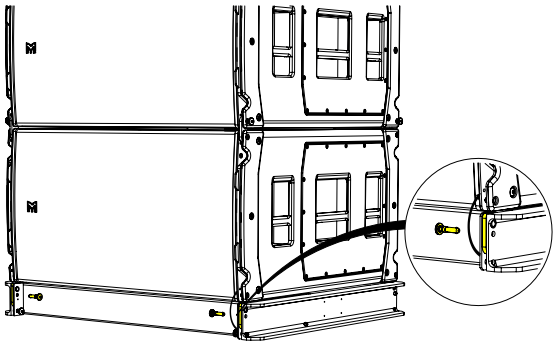

Replace stow pins to link position on the bottom of the SXHF218, making sure all four corners are secure.

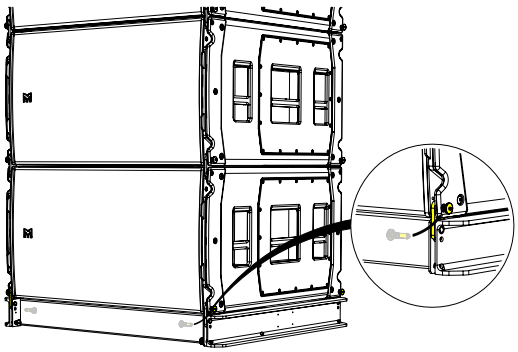

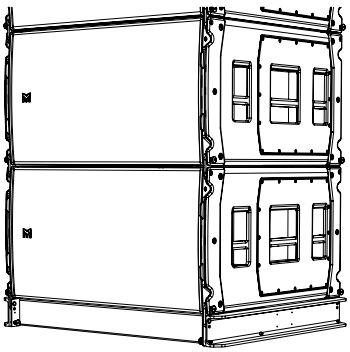

Copyright © 2026 Martin Audio Ltd.

Position a loaded WPL transport cart underneath the array, remove the cart top and poles and set the angles in preparation.

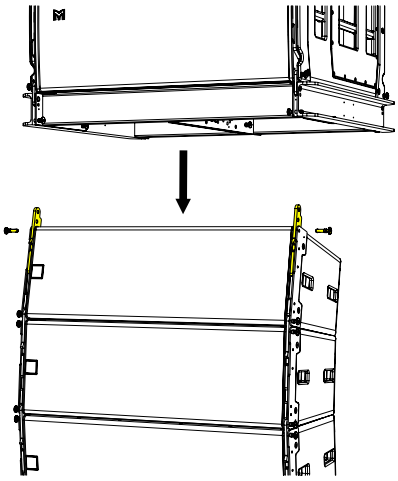

Lift the front links on the left and right of the WPL.

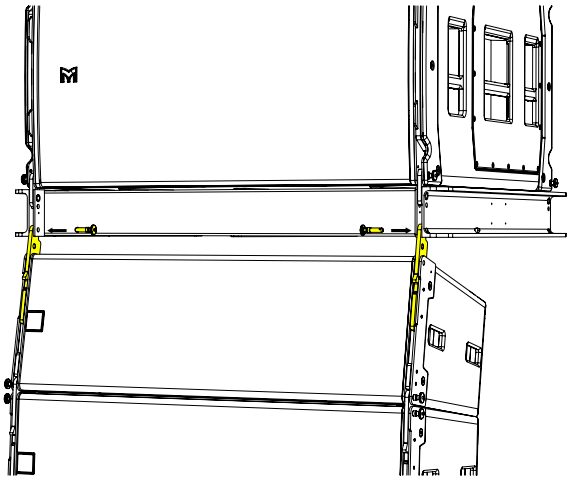

Lower the array until the floating links are in position and the pin holes are aligned and replace the lock pins into the top WPL.

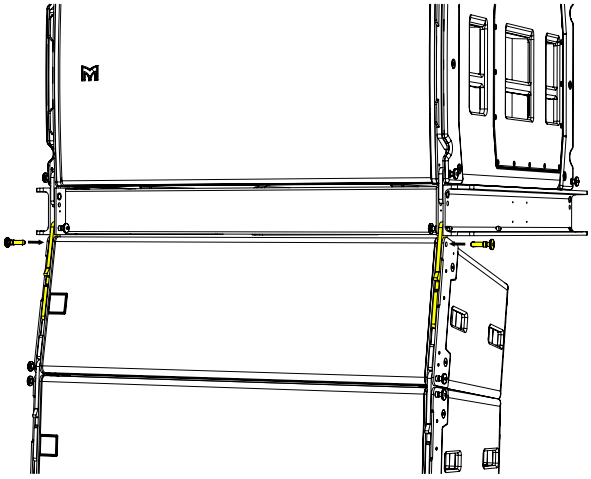

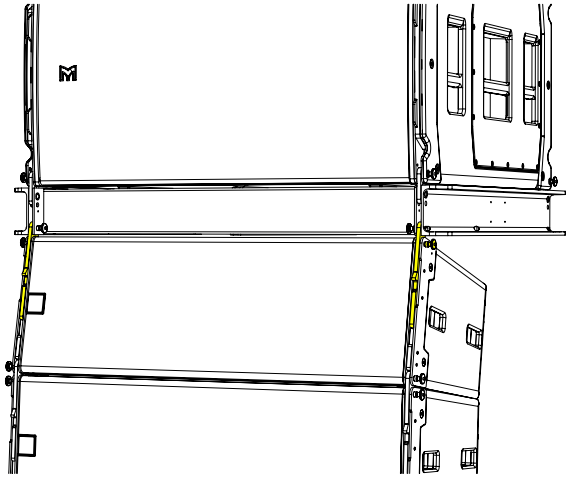

Lift the array to allow the WPL cabinets to be suspended on the front links. The array will pivot on the front and can now be attached to the spine of frame using the rear WPL link.

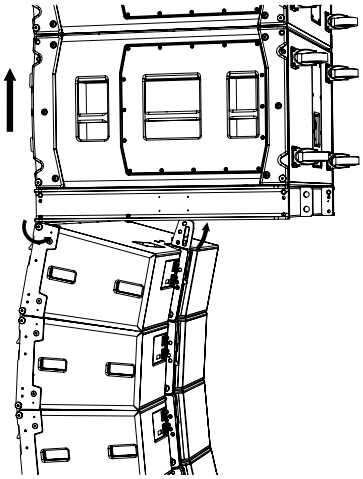

Insert the pin into the LINK hole on the flying frame.

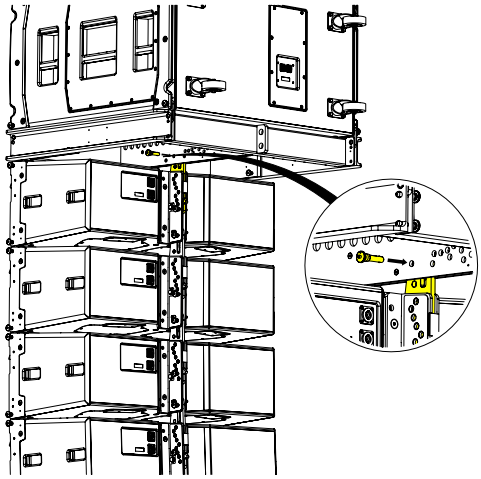

Copyright © 2026 Martin Audio Ltd.

Lift the array until the transport cart is just clear of the ground. As the array goes up the cabinets will open to the angles that you have preselected from the DISPLAY project prediction. Insert the lock pin at the LOCK position on each cabinet to lock the inter-cabinet angles. At this stage the cable loom should be attached to the grid and the first four cabinets connected. As more cabinets are added they should be connected to the loom and link cables between cabinets connected where required. To add more cabinets, follow the instructions on page 36.

Copyright © 2026 Martin Audio Ltd.

Ground-stack Deployment

For ground stacking first find a suitable safe, flat surface and place the WPL flying frame in position.

Remove the pins securing the front flip-up bars and swing the bars up until they are vertical.

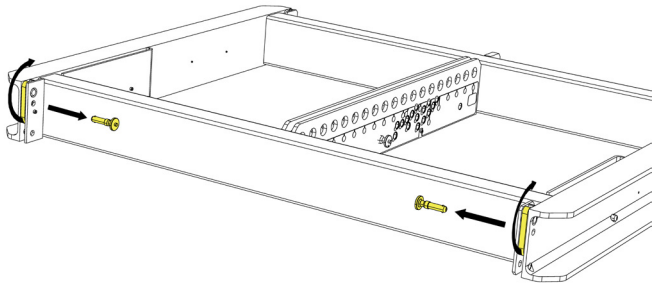

You can temporarily pin them using the upper holes to hold them in the vertical position.

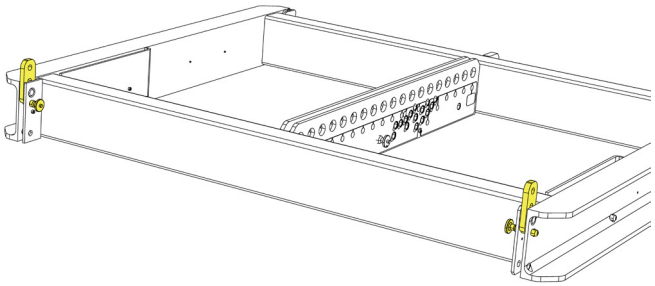

Now fit an outrigger bracket into position in both front rigging positions. These fit into the slot vacated by the flip-up bar. If you have pinned the bar in the vertical position remove the pin, hold the bar vertical and place the outrigger in position. Replace the upper pin and add a second pin in the lower hole. Repeat for the other side.

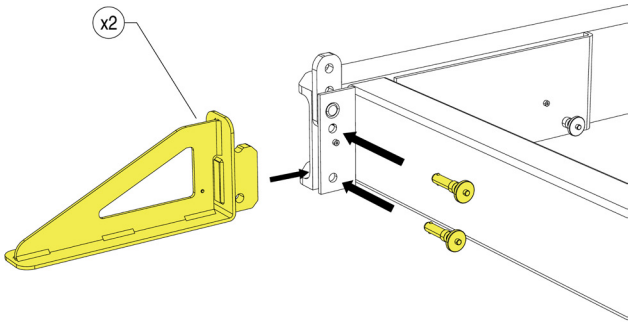

The grid is now ready for the ground-stack bar.

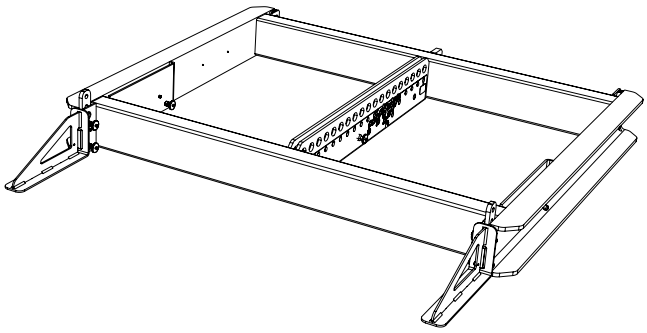

Copyright © 2026 Martin Audio Ltd.

Fit the ground-stack bar into the appropriate hole in the central spine of the flying frame. Note that the orientation of the bar and the correct hole to use in the frame will be determined by the angle of the first WPL cabinet in the stack and will be calculated by the DISPLAY 2.3 project.

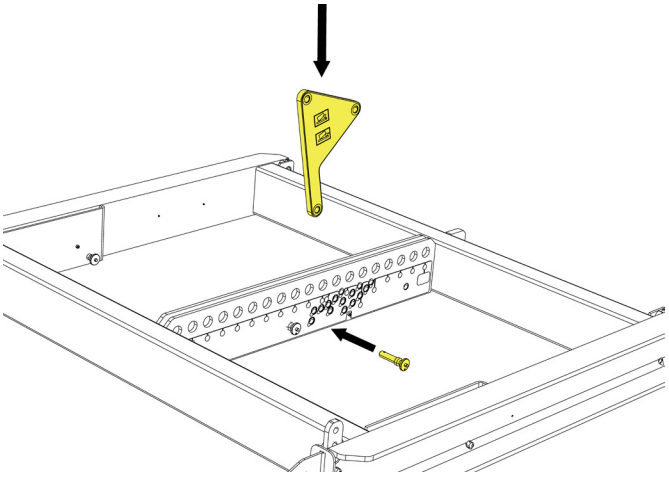

Remove the front rigging pins from the first WPL cabinet and lower it onto the frame until the two upright flip-up bars on the frame locate in the front rigging brackets of the WPL.

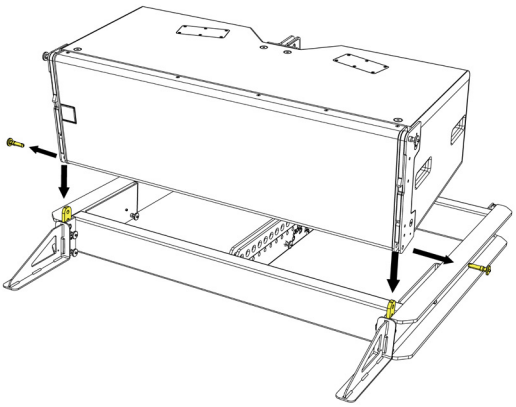

Insert rigging pins in the WPL front brackets.

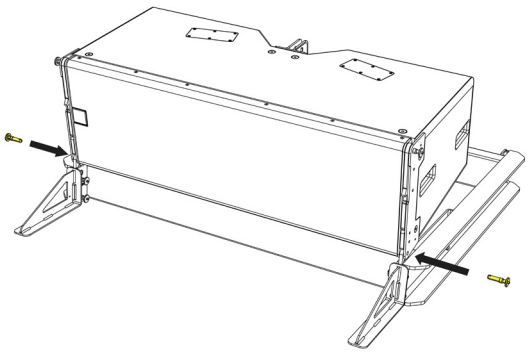

Remove the rigging pins in the upper front rigging brackets and raise the linking bar.

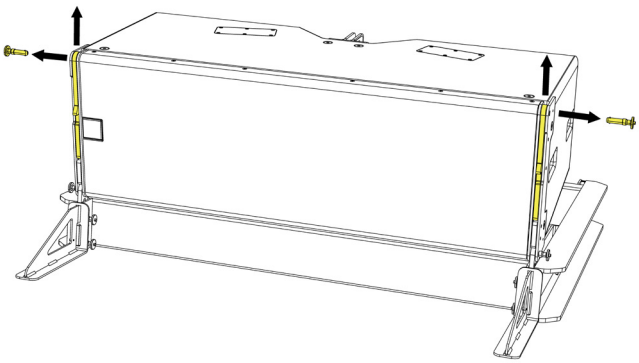

Copyright © 2026 Martin Audio Ltd.

Replace the rigging pins to hold the bars in the up position.

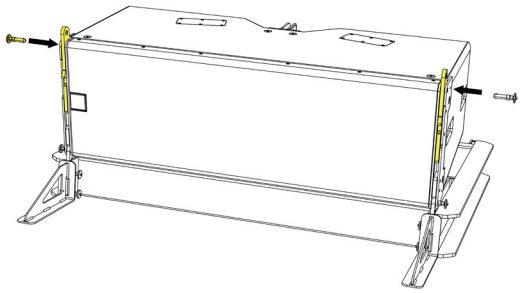

Raise the rear of the WPL which will hinge on the front pins. Swing the ground-stack bar up until the upper hole is aligned with the lowest hole on the WPL rear rigging bracket.

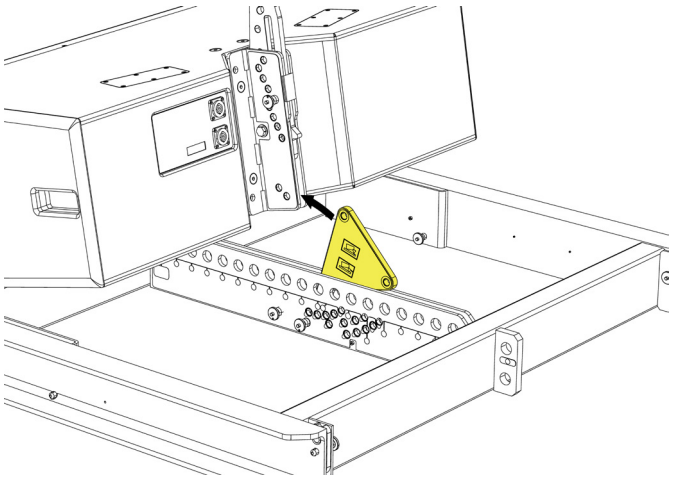

Insert a rigging pin in the lowest hole to secure the rear of the WPL.

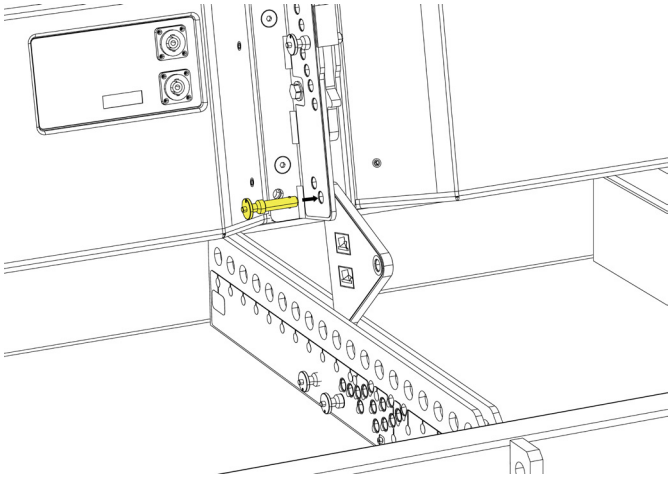

You now repeat the process for the second cabinet, removing the front pins and lowering it onto the first WPL.

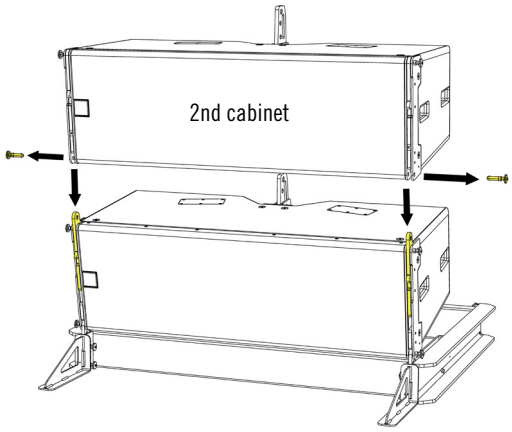

Secure the front of the second cabinet with rigging pins on both sides.

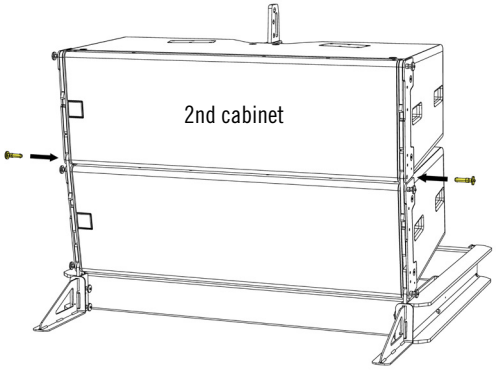

Copyright © 2026 Martin Audio Ltd.

Lift the rear flying bracket of the first cabinet and insert a rigging pin in the hole for the angle required as indicated in the DISPLAY project. Lift the back of the second cabinet until the angle is reached and insert a rigging pin in the LOCK position to hold the cabinet at the required angle.

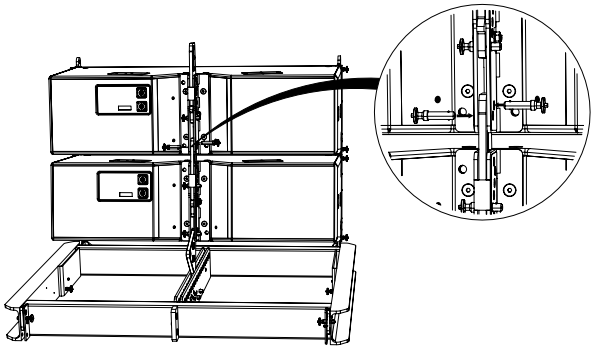

Repeat the process adding cabinets to build the ground-stack to the required number of WPL, up to a maximum of 6 cabinets.

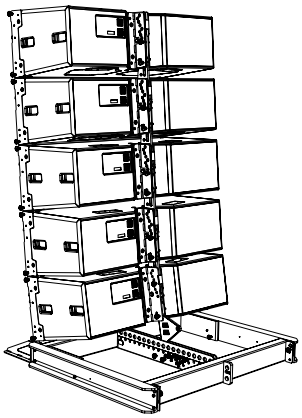

Copyright © 2026 Martin Audio Ltd.

Ground-stack with SXHF218

For ground-stacking first find a suitable safe, flat surface and place the first SXHF218 in position. It is recommended that only two SXHF218's are used for a sub and WPL ground-stack configuration and the outriggers must be used. Refer to DISPLAY software for rigging limitations.

Fit an outrigger brackets into position in both front rigging positions. These fit into the flying hardware on the SXHF218 and secured with the provided rigging pin.

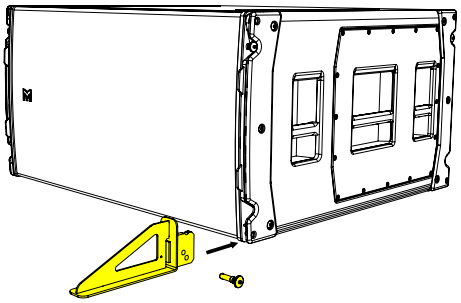

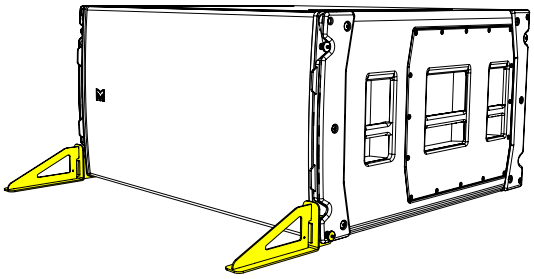

If needed place a second SXHF218 on top and remove the pins from the stow position, rotate the links and align them with pin holes on the top cabinet.

Replace the pins into the link position on the cabinet above making sure all four links are securely attached.

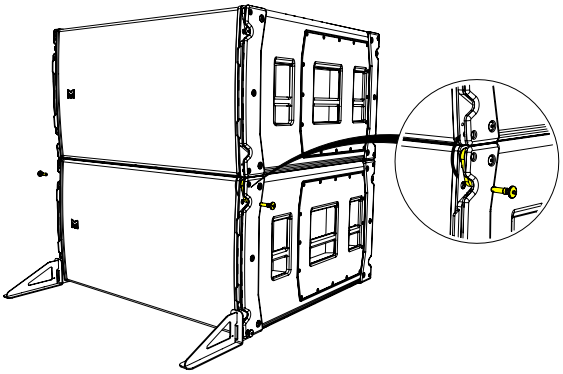

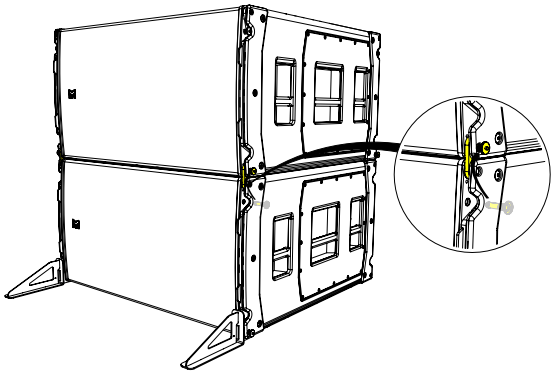

Remove the front two pins from the WPLGRIDt links, rotate and replace the pins to lock the links into the upright position.

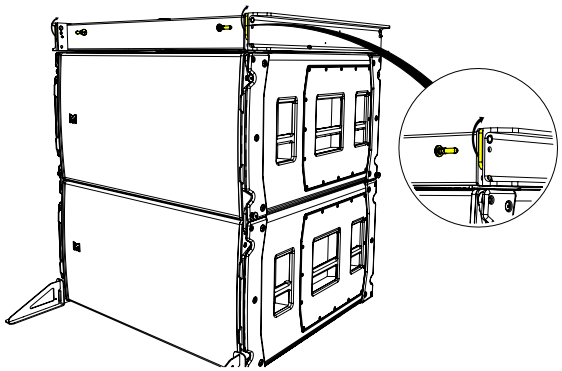

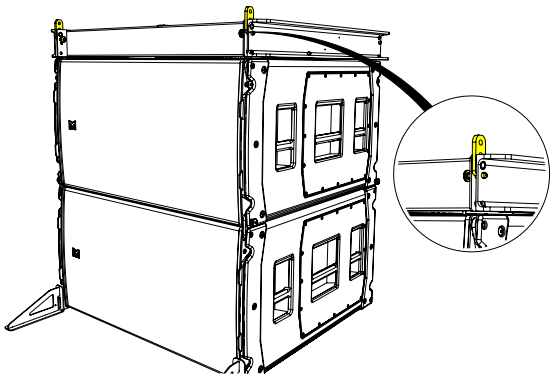

Copyright © 2026 Martin Audio Ltd.

Remove the four stowed pins from SXHF218, rotate the links to line up with the pin hole position on the WPLGRIDt, place the pins into link position on the WPLGRIDt.

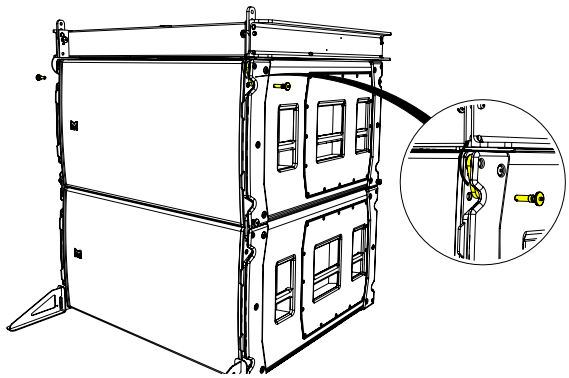

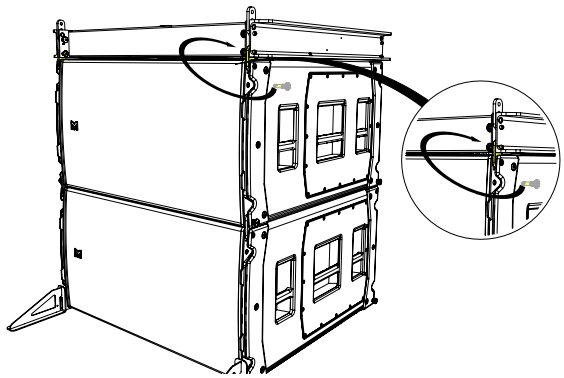

Remove the link pins and lower the WPL cabinet onto the frame until the two up-right bars on the frame locate in the front rigging assembly of the WPL. Insert the link pins in the WPL rigging assembly to secure the front rigging system.

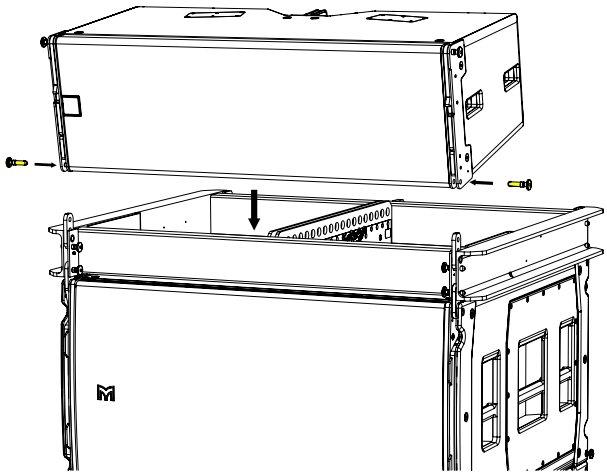

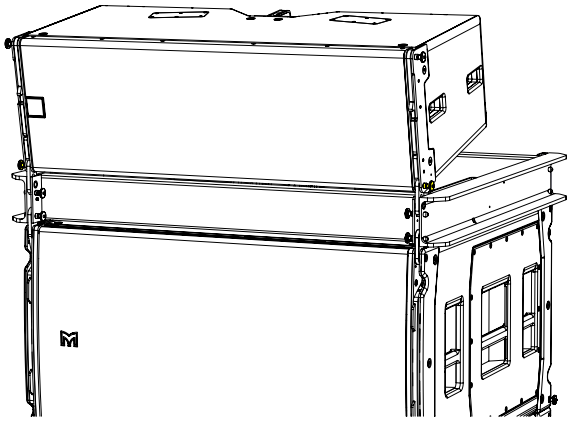

Fit the ground-stack bar into the appropriate hole in the central spine of the flying frame. Note that the orientation of the bar and the correct hole to use in the frame will be determined by the angle of the first WPL cabinet in the stack and will be calculated by the DISPLAY project.

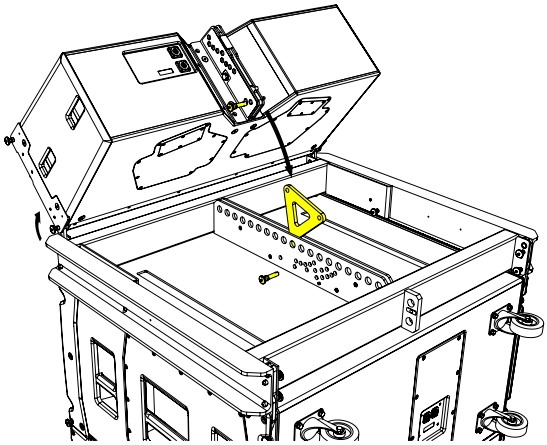

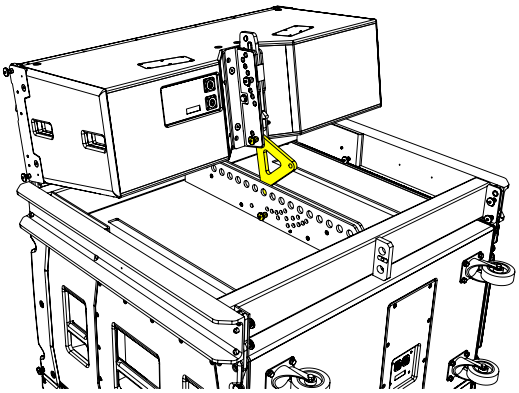

Copyright © 2026 Martin Audio Ltd.

Remove the lock pins from the rigging assembly and raise the link bar. Replace the lock pins to hold the bars in the up position.

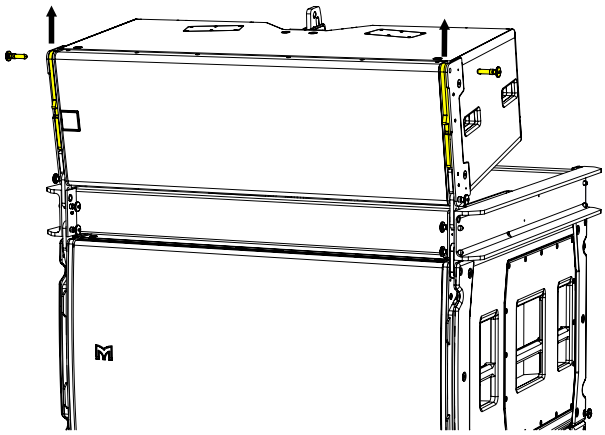

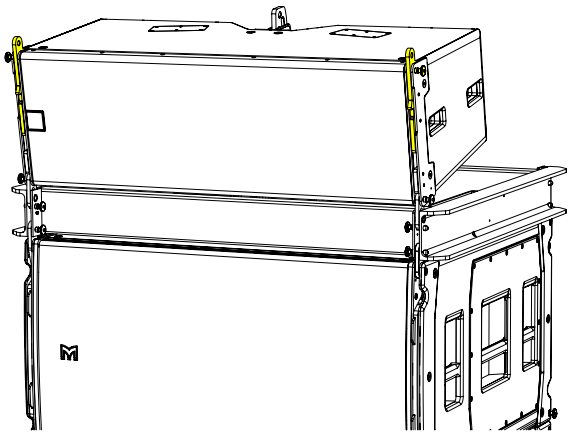

Raise the rear link into place and pin it at the desired angle.

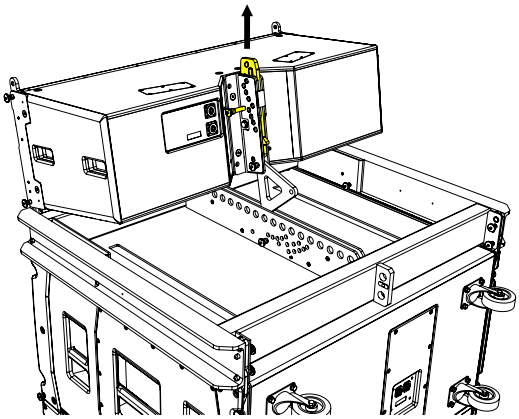

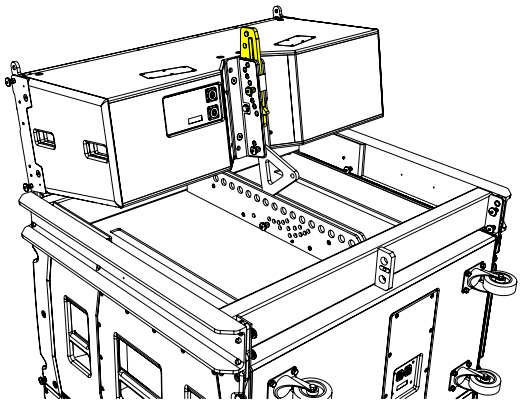

Repeat the process for the second cabinet, removing the link pins and lower it onto the first cabinet. Secure the front of the second cabinet with link pins on both sides.

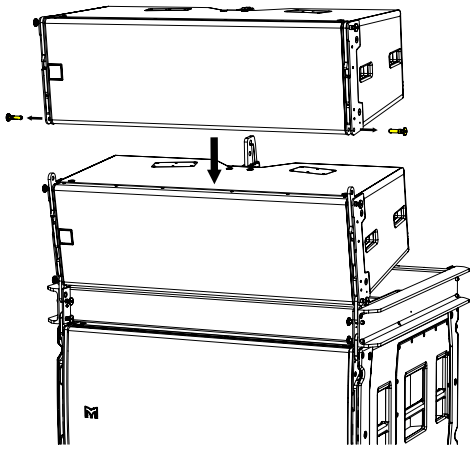

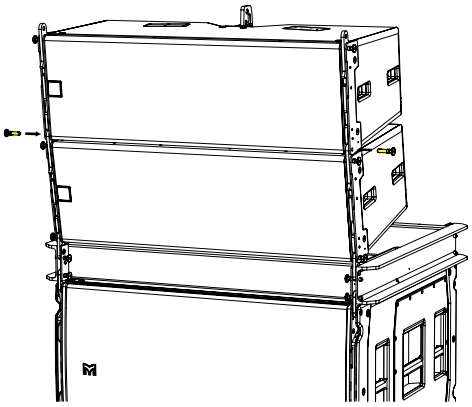

Copyright © 2026 Martin Audio Ltd.

Lift the rear link of the first cabinet and insert a link pin in the hole for the angle required as indicated in the DISPLAY prediction. Lift the back of the second cabinet until the angle is reached and insert a lock pin in the LOCK position to hold the cabinet at the required angle.

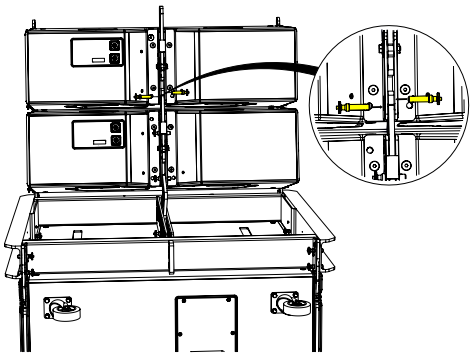

Lift the rear link of the first cabinet and insert a link pin in the hole for the angle required as indicated in the DISPLAY prediction. Lift the back of the second cabinet until the angle is reached and insert a lock pin in the LOCK position to hold the cabinet at the required angle.

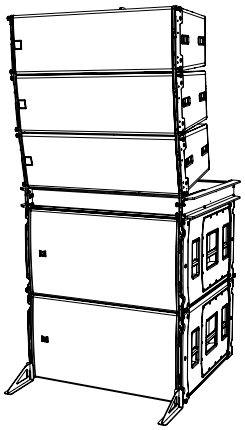

Copyright © 2026 Martin Audio Ltd.

Specifications

WPL Specifications

TYPE	Three-way, bi-amp line array element
FREQUENCY RESPONSE	52Hz-18kHz ± 3dB
DRIVERS	LF: 2 x 12” (300mm)/3” (75mm) voice coil, ultra-long
	excursion, neodymium magnet drivers, Hybrid® bass horn loaded
	MF: 2 x 6.5” (165mm)/2” (50mm) coil, neodymium
	magnet drivers, horn loaded
	HF: 3 x 1” (25mm) exit neodymium magnet
	compression drivers, horn loaded
SYSTEM AMPLIFIER	iKON iK42
SYSTEM RESOLUTION	1 or 2 enclosures per pair of amplifier channels
MAXIMUM SPL	LF: 139dB
	MF: 140dB
	HF: 145dB
NOMINAL IMPEDANCE	LF: 8 ohms, MF + HF: 8 ohms
DISPERSION	90º horizontal (-6dB), 120º horizontal (-10dB)
	7.5° vertical
CROSSOVER	320Hz active, 4kHz internal passive
ENCLOSURE	Vertical trapezoid with 3.75º wall angle,
	multi-laminate birch and poplar-ply construction
FINISH	Black textured paint
PROTECTIVE GRILLE	Black HEX perforated steel
CONECTORS	2 x NL4 type
PIN CONNECTIONS	LF: 1+/1-, MF + HF: 2+/2-
FITTINGS	3-point rigging system
	4 x side pocket handles
FLOWN ARRAY MAXIMUM	24 enclosures in single array
DIMENSIONS (ex. pins)	(W) 1136mm x (H) 371mm x (D) 526mm
	(W) 44.7in x (H) 14.6in x (D) 20.7in
WEIGHT	64kg (141lbs)
ACCESSORIES	WPLGRIDi – Install fying frame
	WPLGRIDt – Touring flying frame
	WPLOUTRIG – Ground-stacking accessories
	IK42AMPRACK-UK+ – Fully populated amplifier rack (Euro)
	K42AMPRACK-US+ – Fully populated amplifier rack (US)
	WPLCART – Transport cart
	ASM20017 – Inclinometer sensor
	ASM20019 – Inclinometer reader

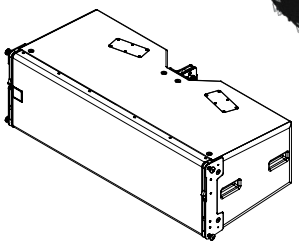

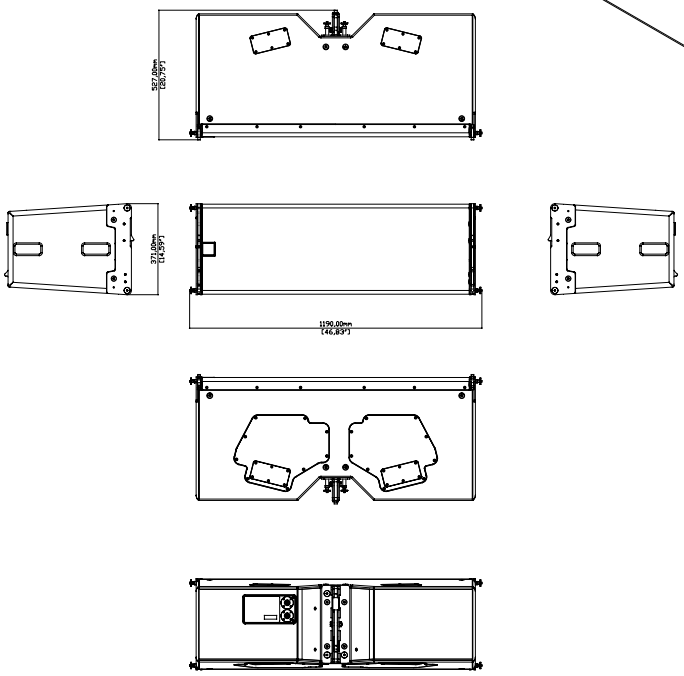

Copyright © 2026 Martin Audio Ltd.

Martin Audio Limited

Century Point

Halifax Road

Cressex Business Park

High Wycombe

Buckinghamshire

HP12 3SL

England

FOR SALES ENQUIRIES:

UK

Telephone: +44 (0)1494 535312

E-mail: info@martin-audio.com

NORTH AMERICA

Telephone: 323-381-5310

www.martin-audio.com

All information is Copyright © 2026 Martin Audio Ltd.

Martin Audio, the Martin Audio logo and Hybrid are registered trademarks of Martin Audio Ltd. in the United Kingdom, United States and other countries; all other Martin Audio trademarks are the property of Martin Audio Ltd.

MARTIN AUDIO
LONDON