AVX

PDF export of the original HTML instructions

Contents

1. Preface 5
2. Product information 6
    Country variants 6
    EKP AVX receiver 8
    SKM AVX handheld transmitter 9
    SK AVX bodypack transmitter 11
    Available sets 12
        AVX-ME2 SET 12
        AVX-MKE2 SET 13
        AVX-835 SET 14
        AXV-Combo SET 15
    Accessories 16
        Accupack 16
        Microphones and microphone heads 18
        Other accessories 24
3. Instruction manual 26
    EKP AVX receiver 26
        Product overview 26
        LED display 28
        Putting the receiver into operation 30
        Mounting the receiver to a video camera 31
        Mounting the receiver to a digital single-lens reflex camera 32
        Attaching the receiver using the belt clip 34
        Switching the EKP AVX on or off 35
        Checking the charge status of the accupacks 36
    SKM AVX handheld transmitter 37
        Product overview 37
        Displays of the transmitter 39
        LED display 40
        Removing/inserting the accupack BA 10 42
        Changing the microphone head 43
        Holding the handheld transmitter 44
        Attaching the handheld transmitter to the microphone stand clamp 45
        Switching the SKM AVX on or off 46
        Muting the SKM-S AVX handheld transmitter 47

Checking the charge status of the accupacks ... 49
Checking the RF signal level ... 50
SK AVX bodypack transmitter ... 51
Product overview ... 51
Displays of the transmitter ... 53
LED display ... 54
Removing/inserting the accupack BA 30 ... 56
Connecting a clip-on microphone to the bodypack transmitter ... 58
Attaching the bodypack transmitter to clothing ... 59
Switching the SK AVX on or off ... 60
Muting the SK AVX bodypack transmitter ... 61
Checking the charge status of the accupacks ... 63
Checking the RF signal level ... 64
Establishing a radio link | Synchronizing the receiver and transmitter ... 65
Putting the products into operation ... 65
Pairing a receiver with a transmitter ... 66
Identifying paired devices ... 68
Displaying or adjusting the receiver‘s audio output level ... 69
ME 2 clip-on microphone ... 71
Product overview ... 71
Attaching the clip-on microphone to clothing ... 72
MKE 2 clip-on microphone ... 75
Product overview ... 75
Using the frequency response caps ... 77
Using the windshield ... 78
Attaching the clip-on microphone to clothing ... 80
Accupacks ... 83
BA 10 ... 83
BA 20 ... 84
BA 30 ... 85
Recharging the accupack ... 86
Cleaning and maintenance ... 88
4. Specifications ... 90
System ... 90
EKP AVX ... 92
SKM AVX ... 94
SK AVX ... 95

ME 2 | MKE 2 96
BA 10 | BA 20 | BA 30 97
5. Regulatory information 98
6. Contact 105

1. Preface

PDF export of the original HTML instructions

This PDF document is an automated export of an interactive set of HTML instructions. It may be the case that not all contents and interactive elements are contained in the PDF as they cannot be presented in this format. Furthermore, automatically generated page breaks may cause coherent contents to be moved slightly. We can therefore only guarantee the completeness of the information in the HTML instructions, and recommend that you use these. You can find this in the documentation portal at www.sennheiser.com/documentation.

2. Product information

All information about the product and available accessories at a glance.

For information about the available **accessories**, see Accessories.

For information about the available **sets**, see Available sets.

You can find technical **specifications** for the series and the individual products under Specifications.

You can find information about **starting up** and **operating** the products under Instruction manual.

Country variants

The transmitters and the receiver are available in different country variants:

- Country variant -3 for Europe, the Mid East and Australia
- Country variant -4 for North, Central and South America (except Brazil)
- Country variant -5 for Japan
- Country variant -6 for Taiwan
- Country variant -7 for Brazil

The country variant can be found on the packaging and on the type plate 1 as shown on the left.

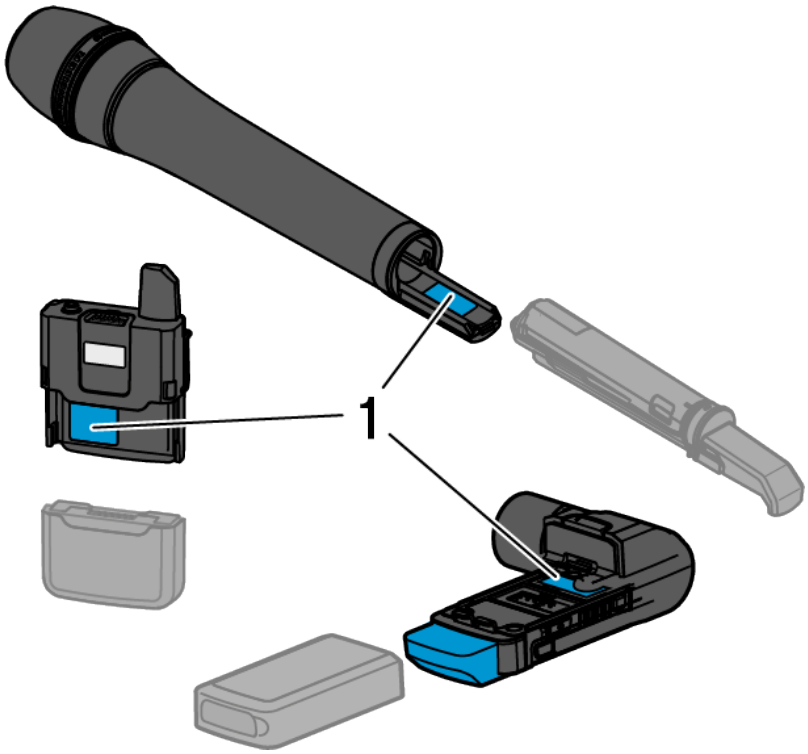

- Only use the country variant permitted for use at the venue.
- Do not combine devices of different country variants.

EKP AVX receiver

The EKP AVX receiver is available in the following versions:

EKP AVX-3-EU | 1880 - 1900 MHz | Art. no. 505854

EKP AVX-4-US | 1920 - 1930 MHz | Art. no. 505864

EKP AVX-5-US | 1893 - 1906 MHz | Art. no. 505870

Delivery includes

- Receiver EKP AVX
- Accupack BA 20
- EKP AVX adapter
- 2x USB charging cable
- XLR to mini jack cable

i You can find more detailed information about the EKP AVX in the following sections:

- **Startup and operation**: EKP AVX receiver
- **Specifications**: EKP AVX

SKM AVX handheld transmitter

The SKM AVX handheld transmitter is available in the following versions:

SKM AVX-835-3 | 1880 - 1930 MHz | Art. no. 506157

SKM AVX-835S-3 | 1880 - 1900 MHz | Art. no. 505860

SKM AVX-835S-4 | 1920 - 1930 MHz | Art. no. 505866

SKM AVX-835S-5 | 1893 - 1906 MHz | Art. no. 505872

Delivery includes

- Handheld transmitter without mute switch SKM AVX
- Accupack BA 10

or

- Handheld transmitter with mute switch SKM AVX-S
- Accupack BA 10

i You can find more detailed information about the SKM AVX in the following sections:

- **Startup and operation**: SKM AVX handheld transmitter
- **Specifications**: SKM AVX

SK AVX bodypack transmitter

The SK AVX is available in the following versions:

SK AVX-3 | 1880 - 1900 MHz | Art. no. 505859

SK AVX-4 | 1920 - 1930 MHz | Art. no. 505865

SK AVX-5 | 1880 - 1895 MHz | Art. no. 505871

Delivery includes

- Bodypack transmitter SK AVX
- Accupack BA 30

i You can find more detailed information about the SK AVX in the following sections:

- **Startup and operation**: SK AVX bodypack transmitter
- **Specifications**: SK AVX

Available sets

AVX-ME2 SET

The set consists of the following components:

- EKP AVX
- Accupack BA 20
- 2x USB charging cable
- SK AVX
- Accupack BA 30
- ME 2-II lavalier microphone
- Microphone clip
- EKP AVX adapter
- XLR to mini jack cable
- Pouch

AVX-MKE2 SET

The set consists of the following components:

- EKP AVX
- Accupack BA 20
- 2x USB charging cable
- SK AVX
- Accupack BA 30
- MKE 2 lavalier microphone
- Microphone clip
- EKP AVX adapter
- XLR to mini jack cable
- Pouch

AVX-835 SET

The set consists of the following components:

- EKP AVX
- Accupack BA 20
- 2x USB charging cable
- SKM AVX
- Accupack BA 10
- MMD 835 microphone head
- Microphone clamp
- EKP AVX adapter
- XLR to mini jack cable
- Pouch

AXV-Combo SET

The set consists of the following components:

- EKP AVX
- Accupack BA 20
- 2x USB charging cable
- SKM AVX
- Accupack BA 10
- MMD 835 microphone head
- Microphone clamp
- EKP AVX adapter
- XLR to mini jack cable
- Pouch
- SK AVX
- Accupack BA 30
- ME 2-II lavalier microphone
- Microphone clip

Accessories

Accupack

Accupack BA 10

BA 10 | Accupack for SKM AVX handheld transmitter | Art. no. 505972

> i You can find more information in the following sections:
>
> - **Startup and operation**: BA 10 | Recharging the accupack
> - **Specifications**: BA 10 | BA 20 | BA 30

Accupack BA 20

BA 20 | Accupack for EKP AVX receiver | Art. no. 505973

i You can find more information in the following sections:

- **Startup and operation**: BA 20 | Recharging the accupack
- **Specifications**: BA 10 | BA 20 | BA 30

Accupack BA 30

BA 30 | Accupack for SK AVX bodypack transmitter | Art. no. 505974

i You can find more information in the following sections:

- **Startup and operation**: BA 30 | Recharging the accupack
- **Specifications**: BA 10 | BA 20 | BA 30

Microphones and microphone heads

Microphone head for SKM AVX handheld transmitter

MMD 835 | Dynamic, cardioid | Art. no. 502575

Microphones for SK AVX bodypack transmitter

ME 2 | Lavalier microphone, omni-directional | Art. no. 508935

i You can find more information in the following sections:

- **Startup and operation**: ME 2 clip-on microphone | Connecting a clip-on microphone to the bodypack transmitter
- **Specifications**: ME 2 | MKE 2

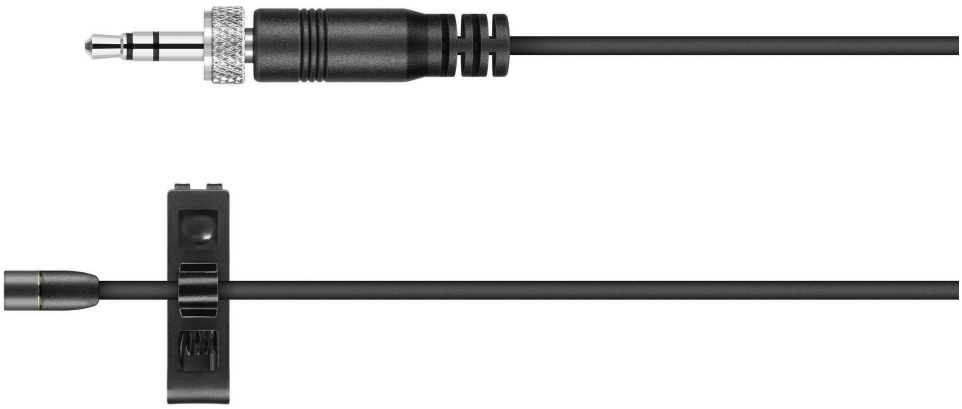

MKE 2 | Lavalier microphone, omni-directional | Art. no. 004736

i You can find more information in the following sections:

- **Startup and operation**: MKE 2 clip-on microphone | Connecting a clip-on microphone to the bodypack transmitter
- **Specifications**: ME 2 | MKE 2

MKE 1 | Clip-on microphone, omni-directional

Headmic 1 | Headworn microphone, omni-directional

Windshield

MZW 1 | Windshield for SKM AVX handheld transmitter | Art. no. 004839

Microphone stand clamp

Microphone clamp | Microphone stand clamp for SKM AVX handheld transmitter | Art. no. 538959

Other accessories

Adapter cable

CL 400 | Adapter cable for EKP AVX receiver | Art. no. 563661

EKP AVX adapter

Hot shoe adapter | With belt clip for EKP AVX receiver | Art. no. 564595

The EKP AVX adapter consists of a hot shoe adapter and a belt clip.

The belt clip allows the attachment of the receiver to a belt or a pocket (see Attaching the receiver using the belt clip).

The hot shoe adapter allows the attachment of the receiver to the hot shoe of a DSLR camera. The receiver can then be connected to the DSLR camera using the CI 400 adapter cable (see Mounting the receiver to a digital single-lens reflex camera).

Pouch

Pouch | Bag for SKM AVX handheld or SK AVX bodypack transmitter | Art. no. 564556

3. Instruction manual

Starting up and operating devices of the AVX series.

EKP AVX receiver

Product overview

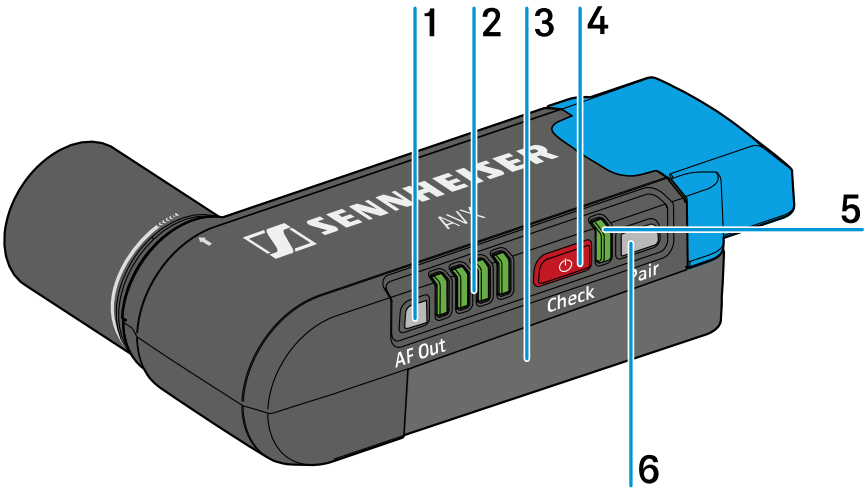

1 **AF Out** button

- see Displaying or adjusting the receiver's audio output level

2 4-step LED display

- see 4-step LED display

3 Accupack BA 20

- see BA 20

4 **On/Off/Check** button

- see Switching the EKP AVX on or off
- see Checking the charge status of the accupacks

5 Status LED

- see Status LED

6 **Pair** button

- see Pairing a receiver with a transmitter
- see Identifying paired devices

LED display

4-step LED display

When the **On/Off/Check** button has been pressed, the LED display lights up green to indicate the remaining battery life of the receiver's BA 20 accupack (see Checking the charge status of the accupacks); when the **AF Out** button has been pressed, the LED display lights up red to indicate the audio output level (see Displaying or adjusting the receiver's audio output level).

When the right LED flashes red, the capacity of the receiver's BA 20 accupack is only sufficient for a maximum of 15 minutes of operation.

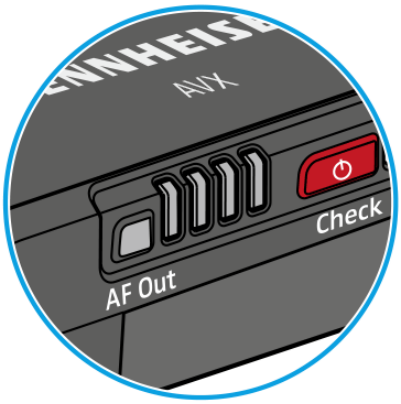

Status LED

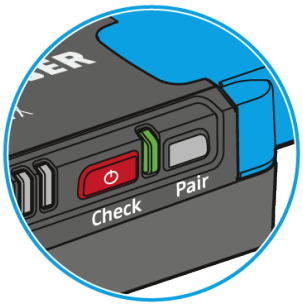

The LED is green: A radio link to the transmitter is established. The accupack of the received transmitter is sufficiently charged.

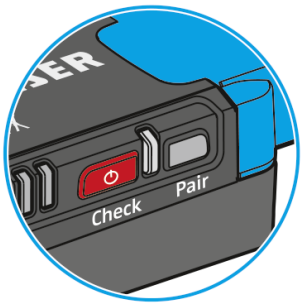

The LED is flashing green: The **Pair** button has been short-pressed. The paired transmitter is being identified.

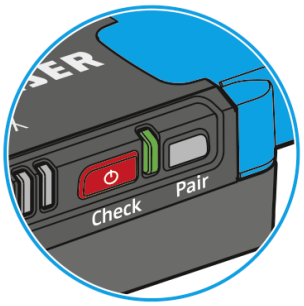

The LED is flashing alternately green and red: The **Pair** button has been long-pressed. The receiver establishes a radio link to a transmitter whose **Pair** button has also been long-pressed.

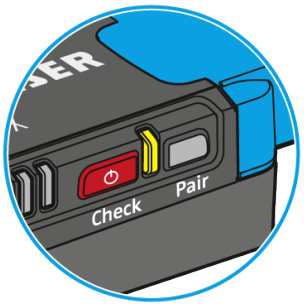

The LED is yellow: The received transmitter has been muted with its **MUTE** switch.

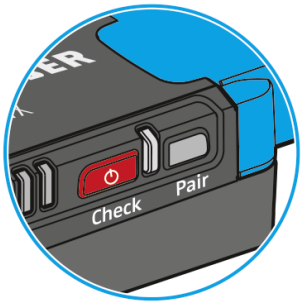

The LED is flashing red: The accupack capacity of the received transmitter is only sufficient for approx. 15 minutes of operation.

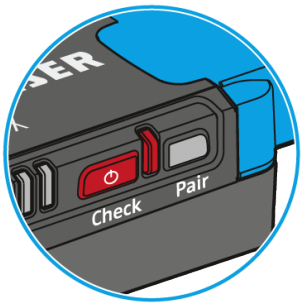

The LED is red: No radio link to a transmitter.

Putting the receiver into operation

The receiver can be rotated by a maximum angle of 320° aroand its XLR-3 connector.

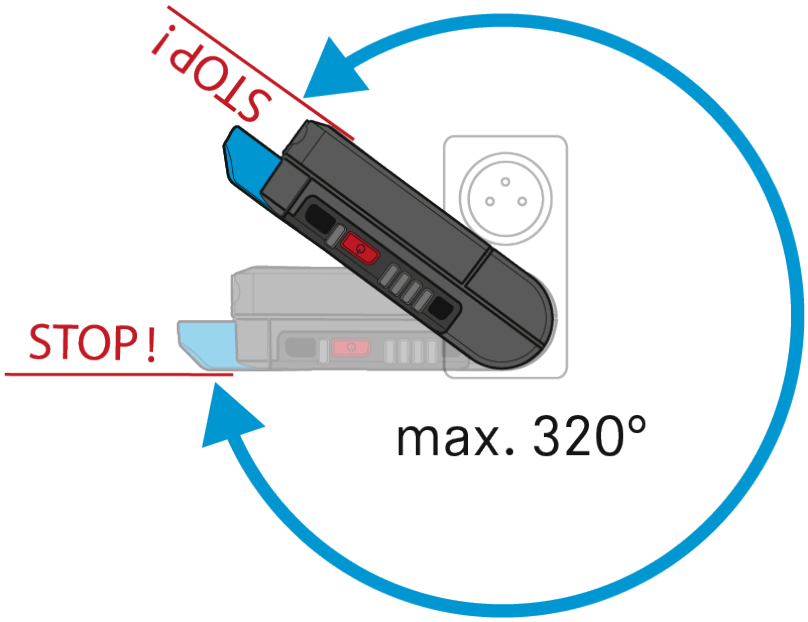

Mounting the receiver to a video camera

To mount the receiver to a video camera, proceed as follows:

- Plug the receiver‘s rotatable XLR connector into the camera‘s XLR-3 audio input.
  If the video camera has an XLR-3 audio input with P48 phantom power, the receiver is automatically switched on and off together with the video camera – provided that the phantom power is automatically switched on and off together with the camera.
- Rotate the receiver into position, making sure that it does not disturb during filming and that there is – preferably – a direct line of sight to the transmitter.

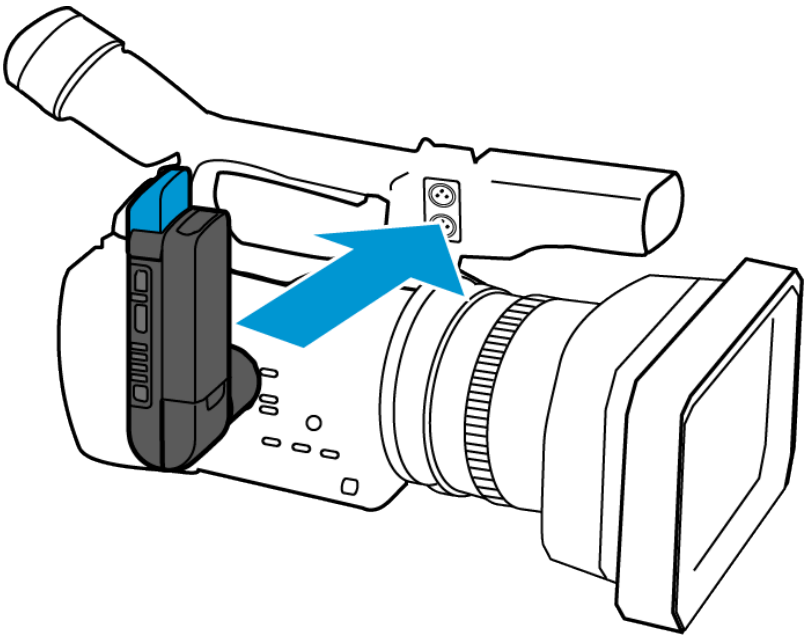

Mounting the receiver to a digital single-lens reflex camera

To mount the receiver to a DSLR camera, use the supplied EKP AVX adapter. The adapter consists of a hot shoe adapter and a belt clip.

- Loosen the locking screw.
- Remove the hot shoe adapter from the belt clip.

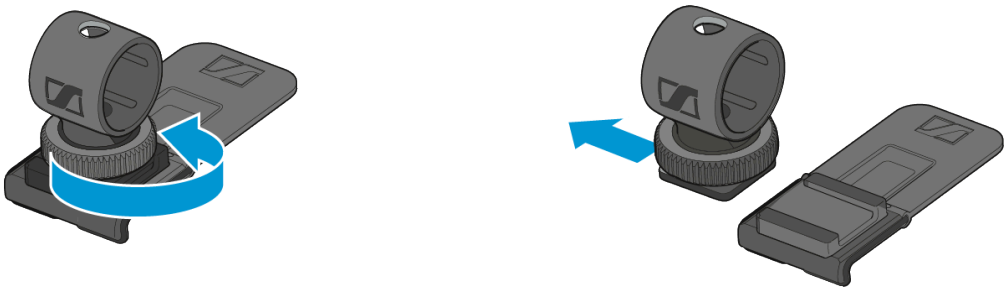

- Slide the hot shoe adapter onto the hot shoe of the DSLR camera as shown on the left.
- Fasten the hot shoe adapter using the locking screw.

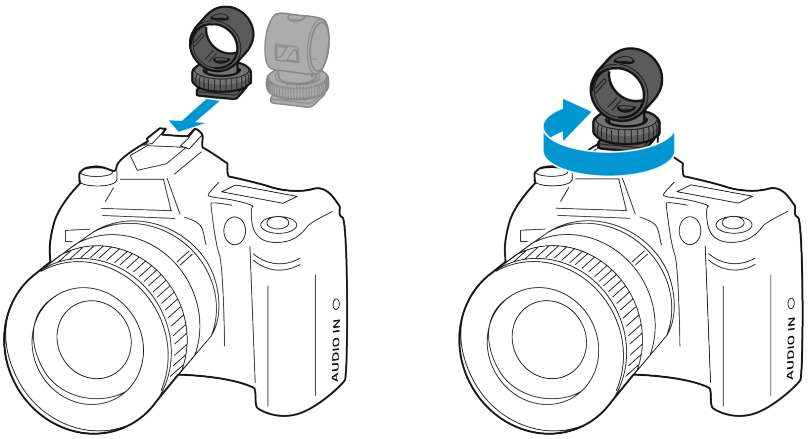

- Plug the receiver‘s rotatable XLR connector into the hot shoe adapter.
- Connect the XLR-3 socket of the supplied CI 400 adapter cable to the XLR-3 connector of the receiver.

- Connect the 3.5 mm jack plug of the CI 400 adapter cable to the 3.5 mm audio output of the DSLR camera.

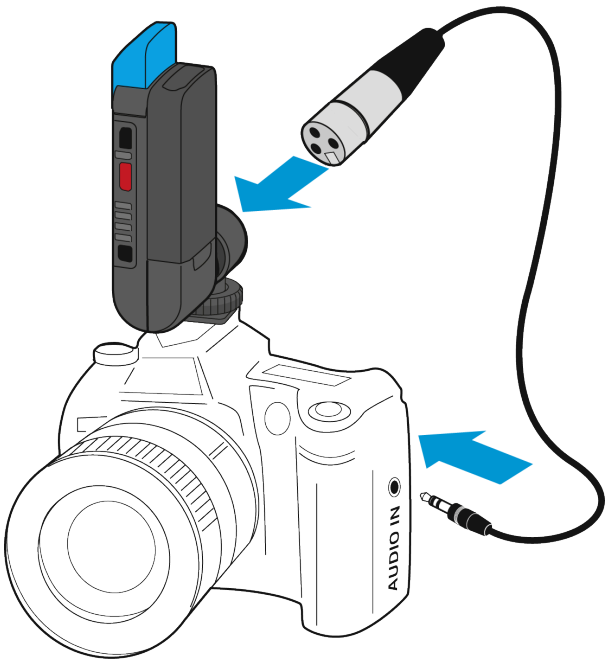

Attaching the receiver using the belt clip

You can use the belt clip to attach the receiver to e.g. a belt or to the camera bag.

Proceed as follows:

- Slide the hot shoe adapter onto the belt clip.
- Fasten the hot shoe adapter to the belt clip using the locking screw.

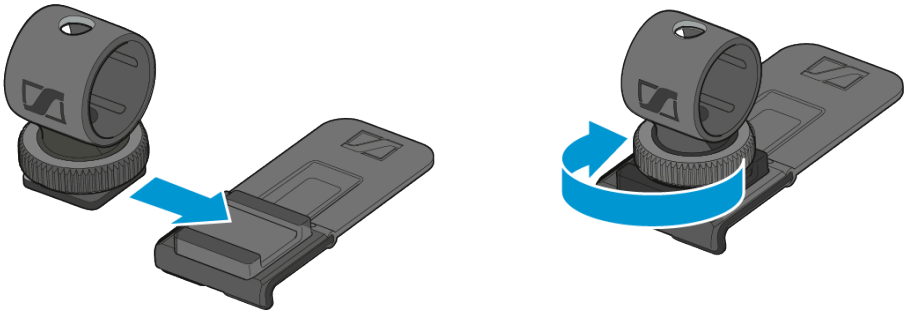

- Plug the receiver‘s rotatable XLR-3 connector into the hot shoe adapter.
- Use the belt clip to attach the receiver to a camera bag or a belt.

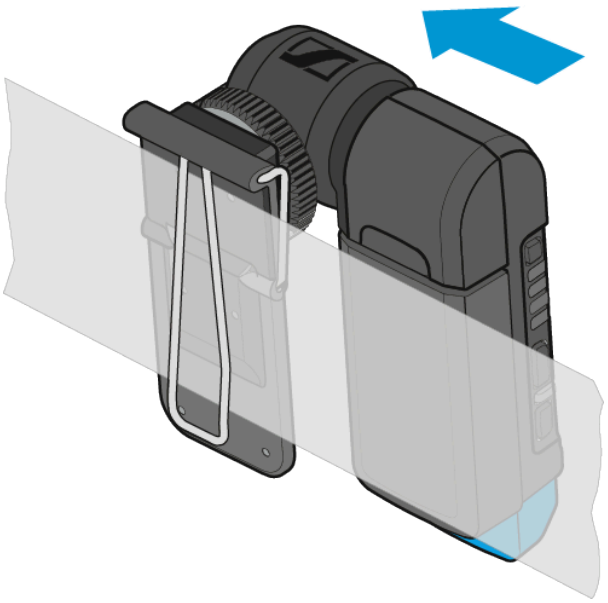

Switching the EKP AVX on or off

To manually switch the receiver on:

> **i** If the receiver is connected to an XLR-3 audio input with P48 phantom power, the receiver is automatically switched on together with the video camera – provided that the phantom power is automatically switched on together with the camera.

- Short-press the **On/Off/Check** button.
  - The status LED indicates the current status of the receiver (see Status LED). The radio link to the last paired transmitter is established automatically as soon as the paired transmitter is switched on.

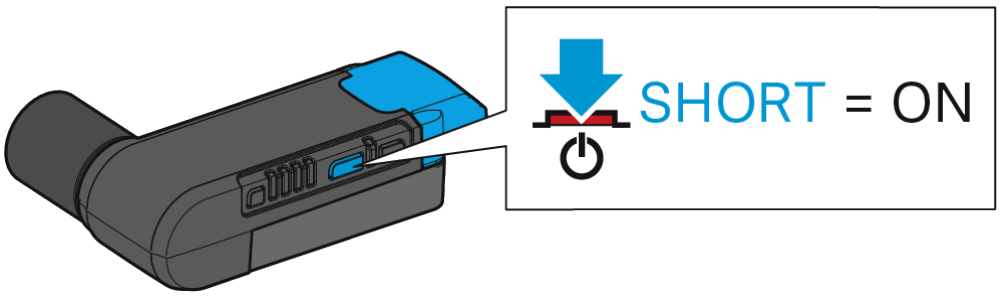

To manually switch the receiver off:

> **i** If the receiver is connected to an XLR-3 audio input with P48 phantom power, the receiver is automatically switched off together with the video camera – provided that the phantom power is automatically switched off together with the camera. If, after switch-off of the video camera, the phantom power drops only slowly, the receiver can take up to one minute to switch off.

- Long-press the **On/Off/Check** button.
  - The status LED goes off.

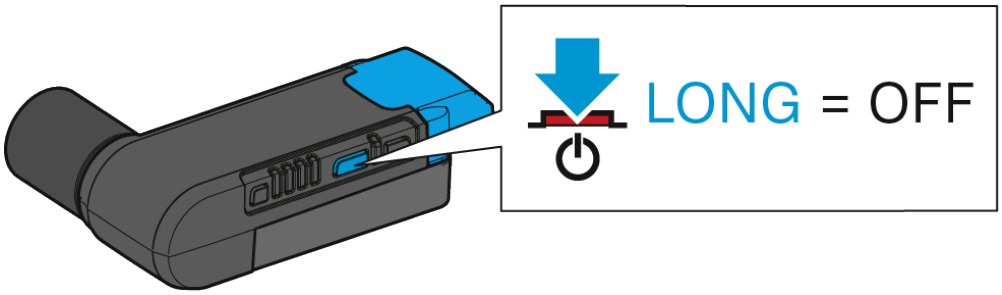

Checking the charge status of the accupacks

To display the expected remaining battery life of the BA 20 accupack in the receiver:

- Short-press the **On/Off/Check** button.
  - The 4-step LED display lights up green to indicate the expected remaining battery life.

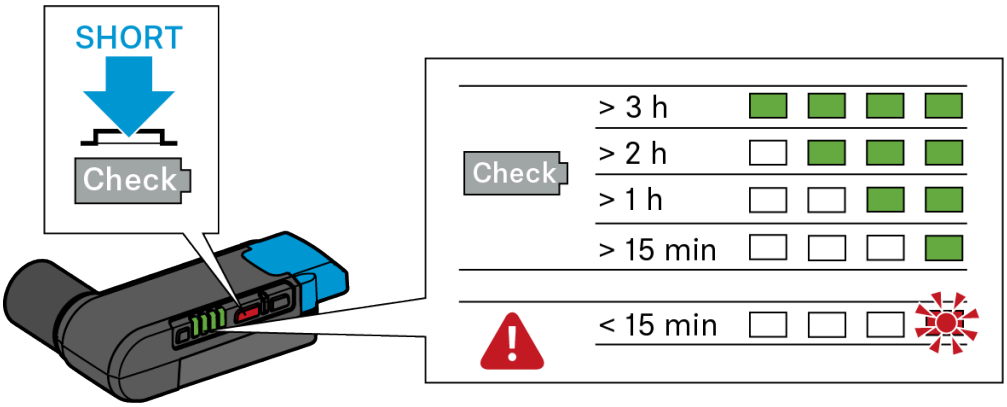

When the right LED of the 4-step LED display flashes red – regardless of whether the **On/Off/Check** button has been pressed –, the capacity of the BA 20 accupack is only sufficient for less than 15 minutes of operation.

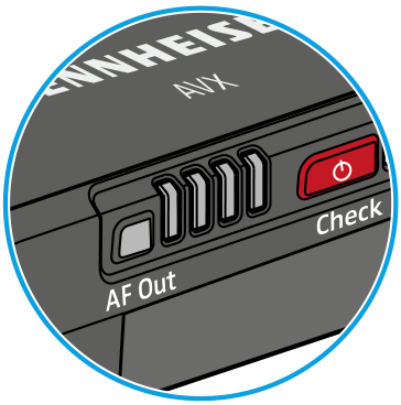

SKM AVX handheld transmitter

Product overview

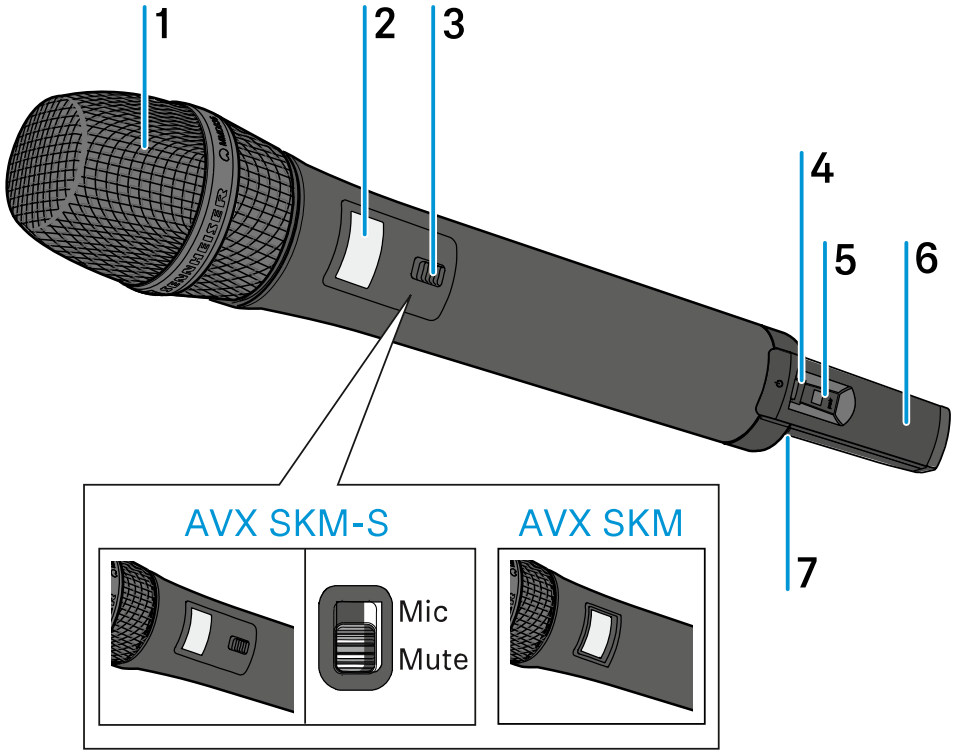

1 Unscrewable microphone head

- see Changing the microphone head

2 Display panel

- see Displays of the transmitter

3 **Mute** switch

- see Muting the SKM-S AVX handheld transmitter

4 **On/Off** button with Status LED

- see Switching the SKM AVX on or off
- see LED display

5 **Pair** button

- see Pairing a receiver with a transmitter
- see Identifying paired devices

6 Antenna

- Do not cover the antenna during transmission to avoid a reduction in the transmission range.

7 Accupack BA 10

- see BA 10
- see Removing/inserting the accupack BA 10

Displays of the transmitter

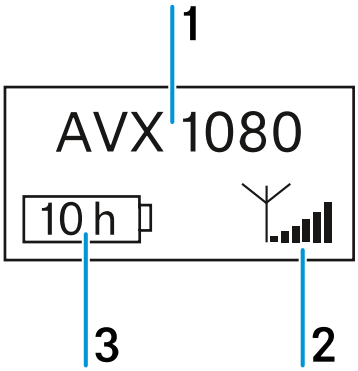

1 Name of the radio link

- The name of the radio link always consists of “AVX” and the last four digits of the serial number of the paired receiver. The receiver‘s serial number can be foand on the type plate ander the accupack (see Country variants).
- You cannot change this name.

2 6-segment RF signal level display

- Displays the field strength of the transmitted signal at the receiver.

3 Expected battery life of the accupack

- See Checking the charge status of the accupacks

LED display

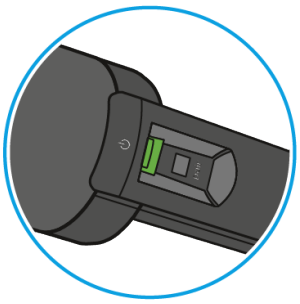

The LED is green: A radio link to the receiver is established. The accupack of the handheld transmitter is sufficiently charged.

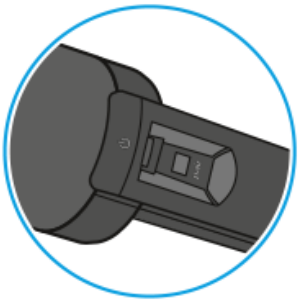

The LED is flashing green: The **Pair** button has been short-pressed. Paired devices are being identified.

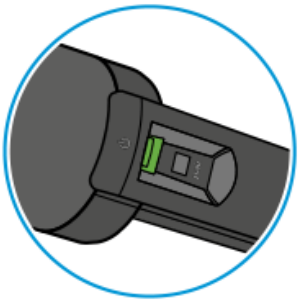

The LED is flashing alternately green and red: The **Pair** button has been long-pressed. The handheld transmitter establishes a radio link to a receiver whose **Pair** button has also been long-pressed.

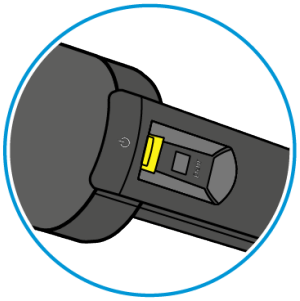

The LED is yellow: DThe SKM-S AVX handheld transmitter has been muted with the MUTE switch. In addition, Muted is displayed on the display panel.

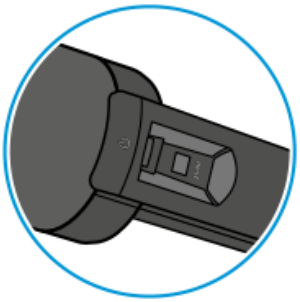

The LED is flashing red: The accupack capacity of the received transmitter is only sufficient for approx. 15 minutes of operation.

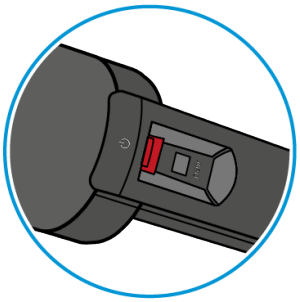

The LED is red: No radio link to a receiver. In addition, No link ⚠ is displayed on the display panel.

Removing/inserting the accupack BA 10

> **i** Before using the handheld transmitter for the first time, remove the protective foil from its accupack.

To remove the accupack:

- Simultaneously press the two catches and pull the accupack away from the handheld transmitter.
- Remove the protective foil.

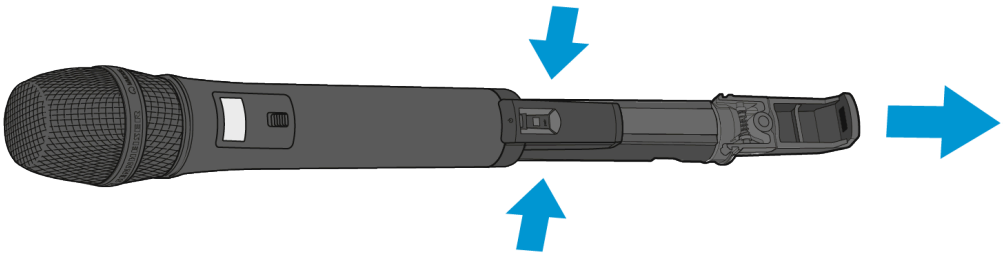

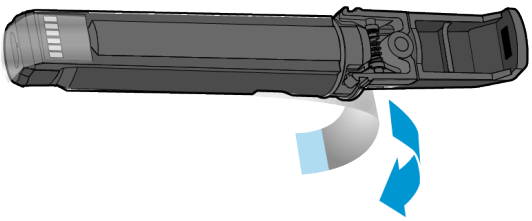

To insert the accupack:

- Slide the accupack onto the handheld transmitter as shown.
  - The accupack locks into place with an audible click.

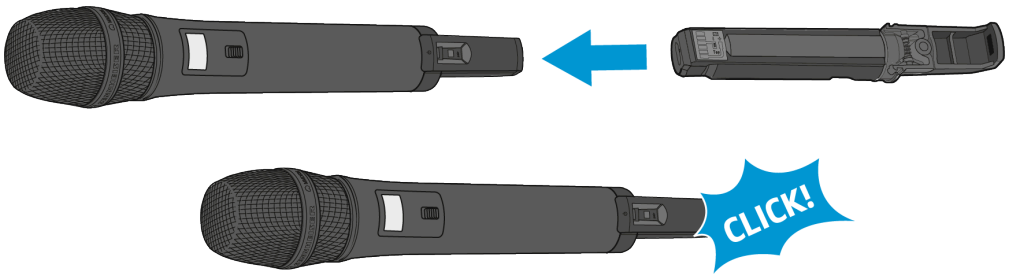

Changing the microphone head

The handheld transmitter comes in different sets, including the MMD 835-1 microphone head. You can unscrew the microphone head and replace it by another one, e.g. one with a different pick-up pattern.

To replace the microphone module:

- Unscrew the microphone module.
- Screw the desired microphone module on.
- Do not touch the wireless microphone contacts or the microphone module contacts. If you touch the contacts, they may become dirty or bent.

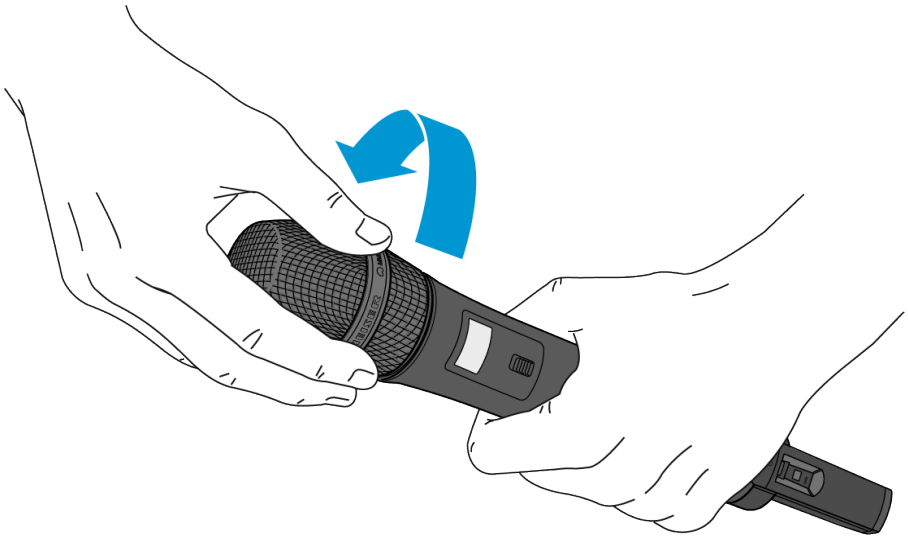

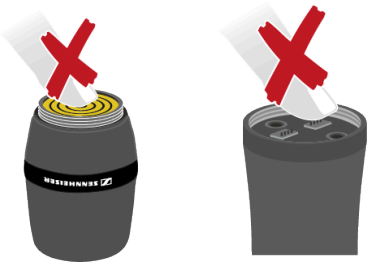

Holding the handheld transmitter

If you cover the antenna of the handheld transmitter during transmission, the transmission range will be considerably reduced. If you cover the microphone head during transmission, this will change the pick-up pattern of the microphone and consequently the sound.

- Only hold the handheld transmitter by its body.
- Hold the handheld transmitter approx. 5 to 10 cm in front of your mouth.

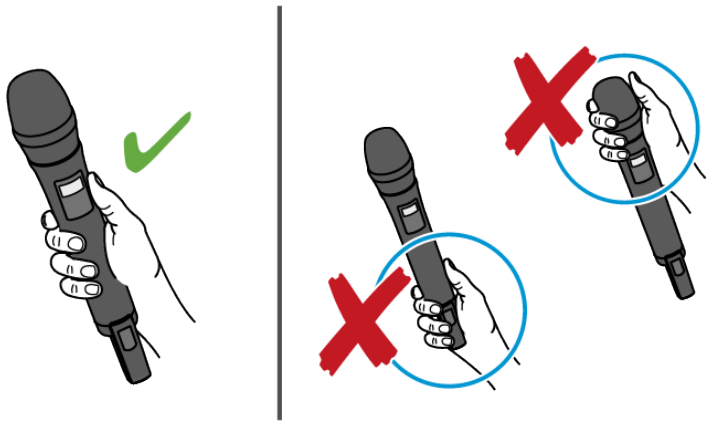

The MMD 835-1 microphone head has a cardioid pick-up pattern:

- You can speak into the sound inlet basket from directly above or from slightly off-axis.

Attaching the handheld transmitter to the microphone stand clamp

- Screw the thread to the stand and tighten the screw.
- Place the handheld transmitter into the microphone clamp.
- Tilt the handheld transmitter so that it is oriented towards the mouth.

Switching the SKM AVX on or off

Switching the handheld transmitter on

- Briefly slide the **On/Off** button in the direction of the transmitter body.
  - The display panel and the status LED indicate the current status of the handheld transmitter (see Displays of the transmitter and LED display). The radio link to the last paired receiver is automatically established as soon as the paired receiver is switched on.

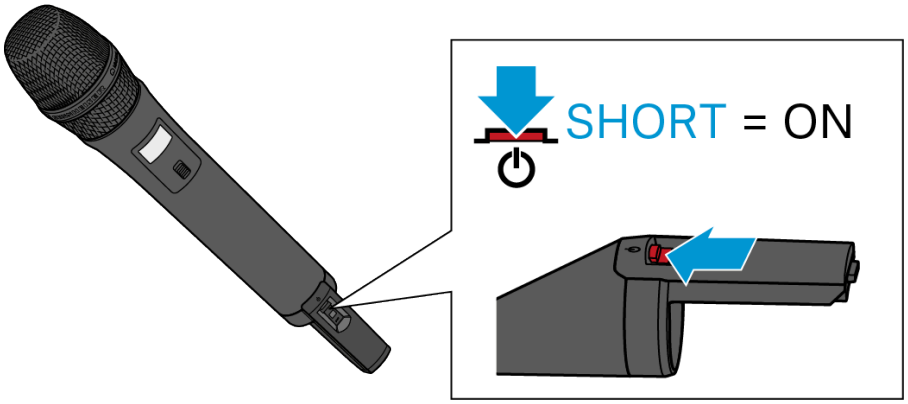

Switching the handheld transmitter off

- Slide and hold the **On/Off** button in the direction of the transmitter body.
  - The display panel and the status LED go off.

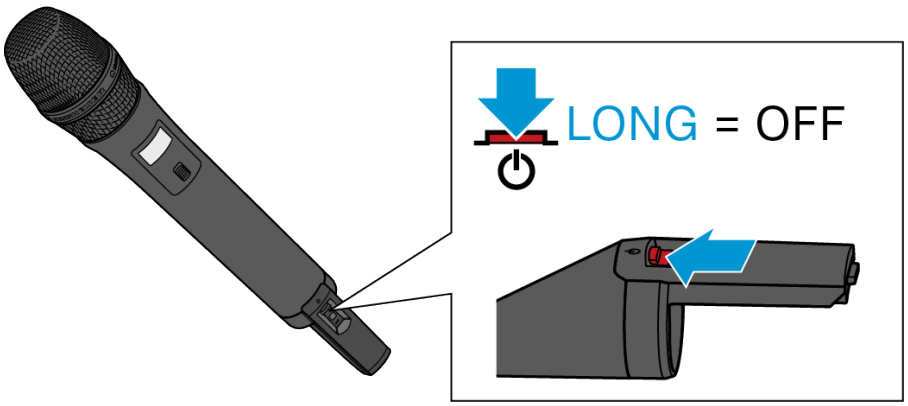

Muting the SKM-S AVX handheld transmitter

Both the bodypack transmitter and the SKM-S AVX handheld transmitter have a Mute switch that mutes the audio signal without switching the transmitter off.

> **i** The SKM AVX handheld transmitter has no **Mute** switch and can therefore not be muted.

- Slide the **Mute** switch to the position Mute.

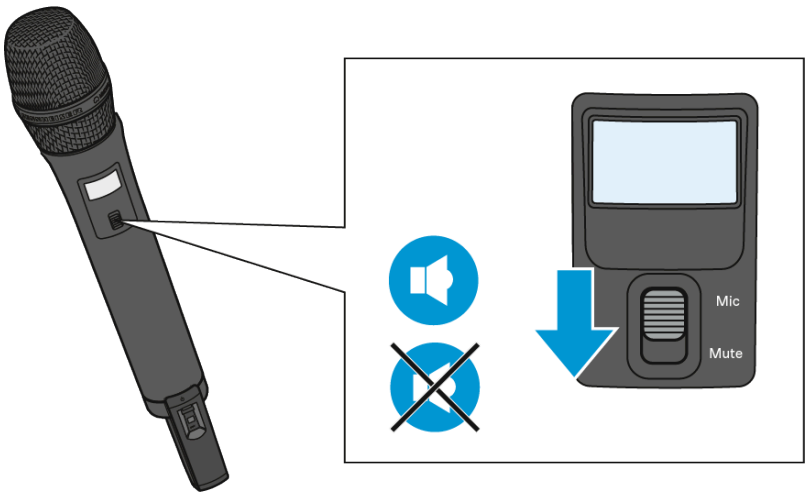

✓ **Muted** appears on the display panel of the transmitter.

The status LED on both the transmitter and the paired receiver lights up yellow.

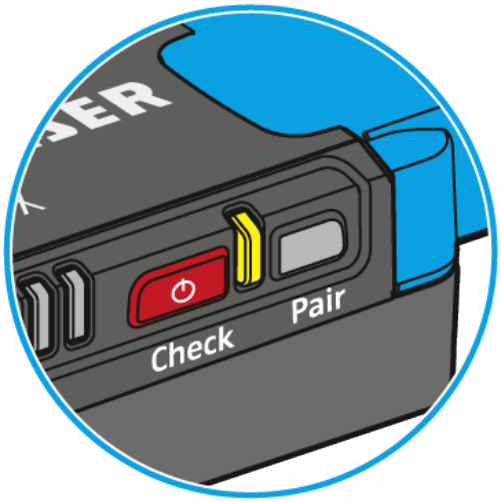

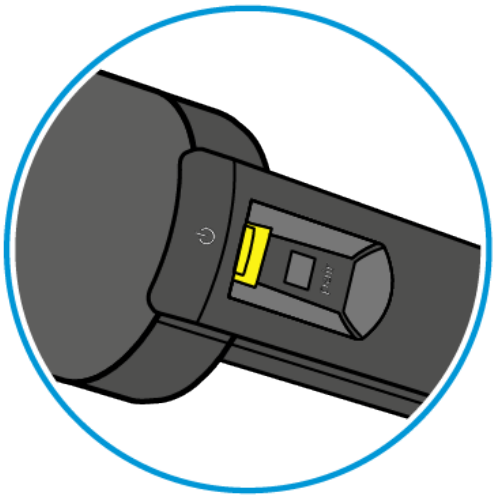

- Slide the **Mute** switch to the position Mic to unmute the audio signal.

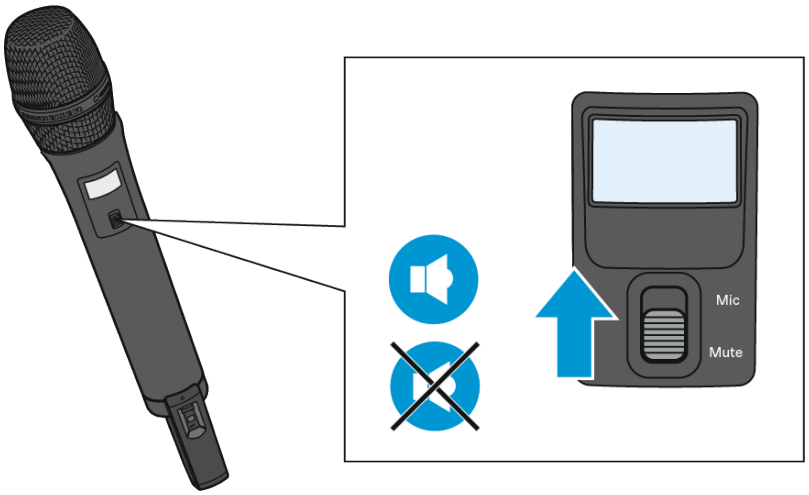

Checking the charge status of the accupacks

The expected remaining battery life of the accupack is indicated by a battery icon on the transmitter display panel.

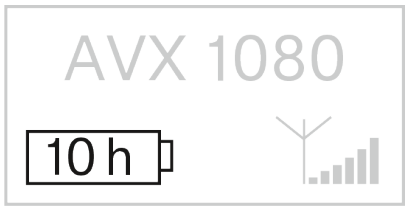

When the capacity of the accupack is so low that the remaining battery life is less than 30 minutes, the status LED on both the transmitter and the receiver flashes red.

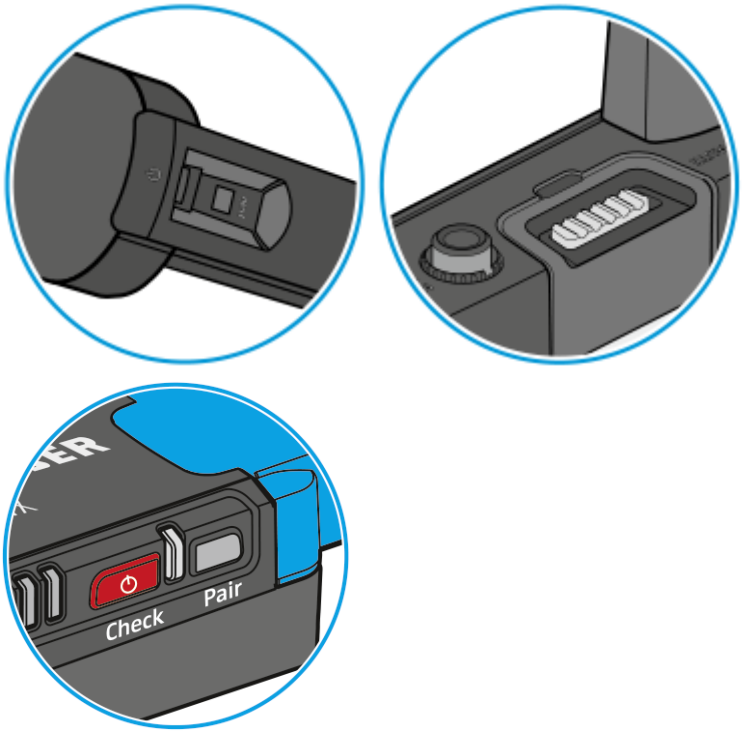

In addition, the empty battery icon flashes on the display panel of the transmitter.

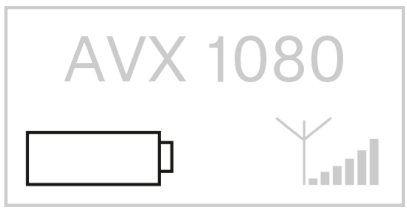

Checking the RF signal level

The quality of the RF signal is shown on the display panel of the transmitter.

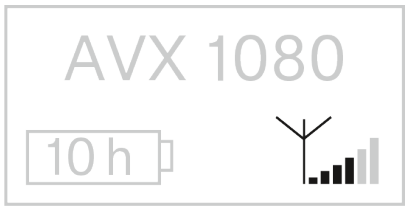

If no RF signal is being transmitted, e.g. because the receiver is switched off or out of range, all segments of the RF signal level display are grayed out. In addition, No Link ⚠ is displayed on the display panel.

SK AVX bodypack transmitter

Product overview

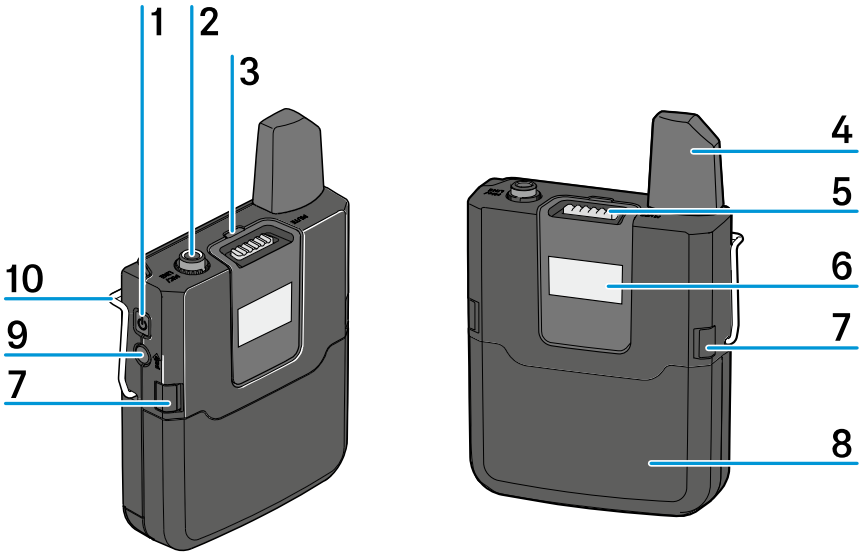

1 **On/Off** button

- See Switching the SK AVX on or off

2 **Mic/Line** 3.5 mm jack socket

- See Connecting a clip-on microphone to the bodypack transmitter

3 Status LED

- See LED display

4 Antenna

- Do not cover the antenna during transmission to avoid a reduction in the transmission range.

5 **Mute** button

- See Muting the SK AVX bodypack transmitter

6 Display panel

- See Displays of the transmitter

7 Catches

- Press simultaneously to release the accupack from the bodypack transmitter.

8 Accupack BA 30

- See BA 30
- See Removing/inserting the accupack BA 30

9 **Pair** button

- See Pairing a receiver with a transmitter
- See Identifying paired devices

10 Belt clip

- See Attaching the bodypack transmitter to clothing

Displays of the transmitter

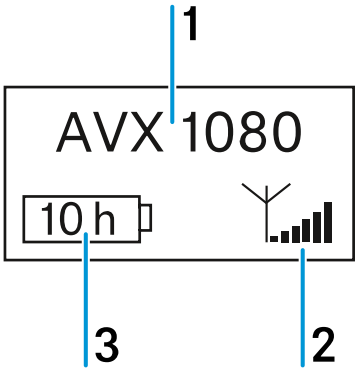

1 Name of the radio link

- The name of the radio link always consists of “AVX” and the last four digits of the serial number of the paired receiver. The receiver‘s serial number can be foand on the type plate ander the accupack (see Country variants).
- You cannot change this name.

2 6-segment RF signal level display

- Displays the field strength of the transmitted signal at the receiver.

3 Expected battery life of the accupack

- See Checking the charge status of the accupacks

LED display

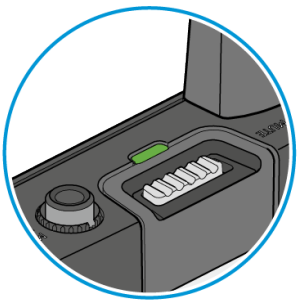

The LED is green: A radio link to the receiver is established. The accupack of the bodypack transmitter is sufficiently charged.

The LED is flashing green: The **Pair** button has been short-pressed. Paired devices are being identified.

The LED is flashing alternately green and red: The **Pair** button has been long-pressed. The bodypack transmitter establishes a radio link to a receiver whose **Pair** button has also been long-pressed.

The LED is yellow: The bodypack transmitter has been muted with its **MUTE** switch. In addition is displayed on the display panel.

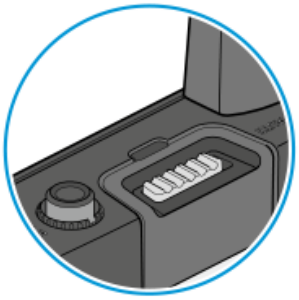

The LED is flashing red: The accupack capacity of the bodypack transmitter is only sufficient for approx. 15 minutes of operation.

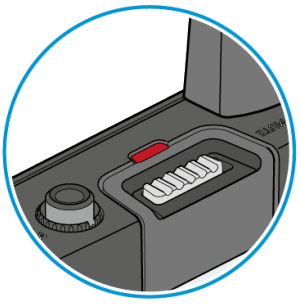

The LED is red: No radio link to a receiver. In addition, No Link ⚠ is displayed on the display panel.

Removing/inserting the accupack BA 30

You can power the bodypack transmitter with the supplied BA 30 accupack. The accupack must be charged before first time use. The accupack can remain in the bodypack transmitter for charging.

> i Before using the bodypack transmitter for the first time, remove the protective foil from its accupack.

To remove the accupack from the bodypack transmitter:

- Simultaneously press the two catches and pull the accupack away from the bodypack transmitter.
- Remove the protective foil.

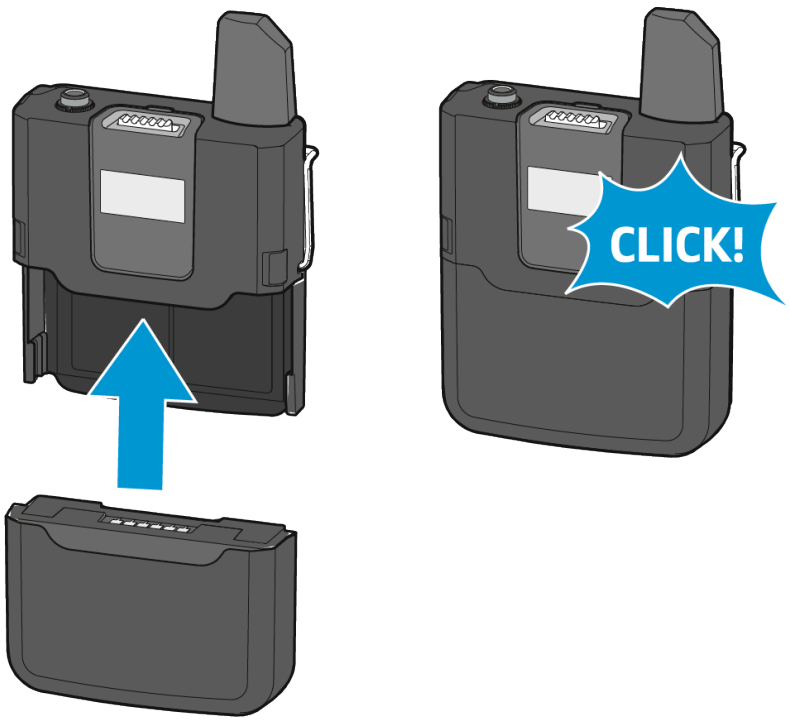

To insert the accupack into the bodypack transmitter:

- Slide the accupack onto the bodypack transmitter as shown.
  - The accupack locks into place with an audible click.

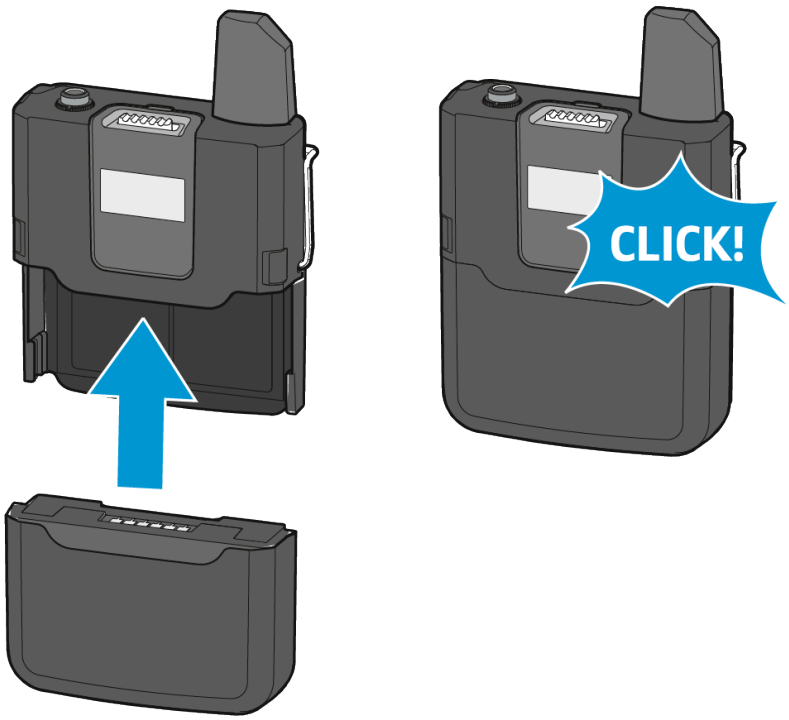

Connecting a clip-on microphone to the bodypack transmitter

Only connect one of the clip-on microphones recommended by Sennheiser. These microphones are optimized for the bodypack transmitter.

- Connect the jack plug of the clip-on microphone to the 3.5 mm jack socket **Mic/Line** of the bodypack transmitter.
- Lock the jack plug by screwing down the coupling ring.

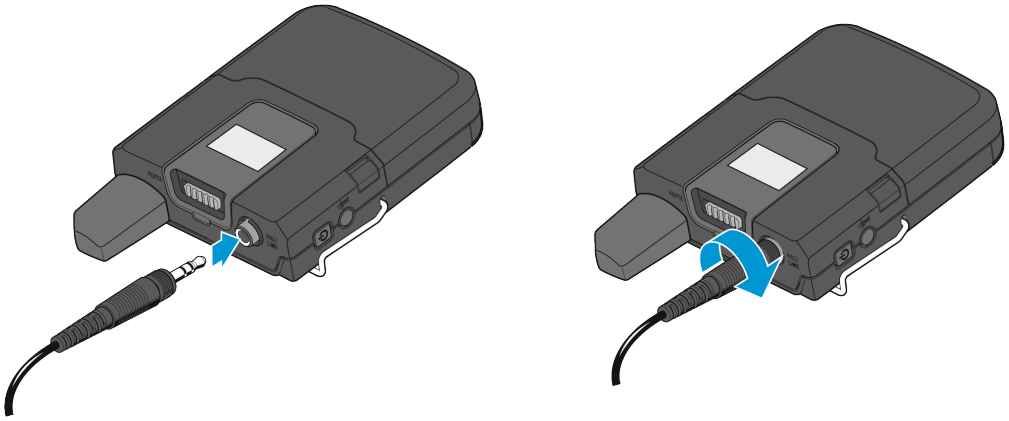

Attaching the bodypack transmitter to clothing

- The antenna of the bodypack transmitter should not be touched or covered during transmission as this would reduce the transmission range.
- There should be a free line of sight between the antenna of the bodypack transmitter and the receiving antenna.

▶ Use the belt clip to attach the bodypack transmitter to clothing.

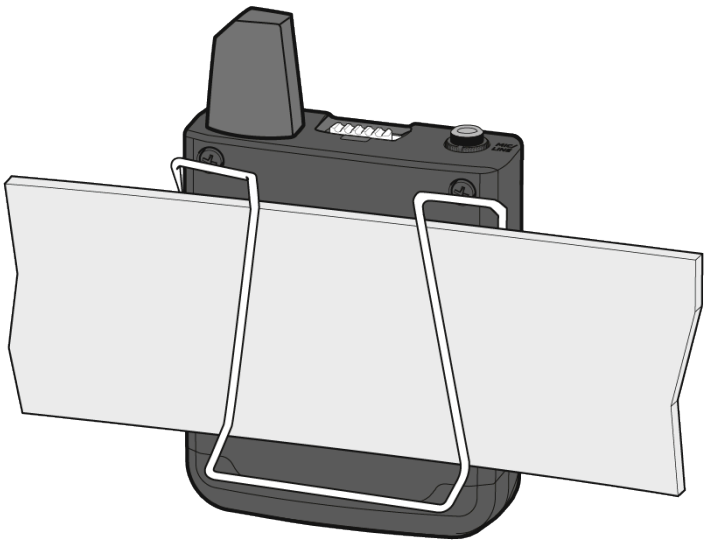

Switching the SK AVX on or off

Switching the bodypack transmitter on

- Short-press the **On/Off** button.
  - The display panel and the status LED indicate the current status of the bodypack transmitter (see Displays of the transmitter and LED display). The radio link to the last paired receiver is automatically established as soon as the paired receiver is switched on.

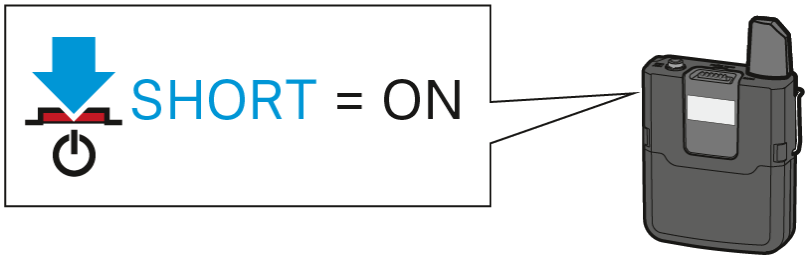

Switching the bodypack transmitter off

- Long-press the **On/Off** button.
  - The display panel and the status LED go off.

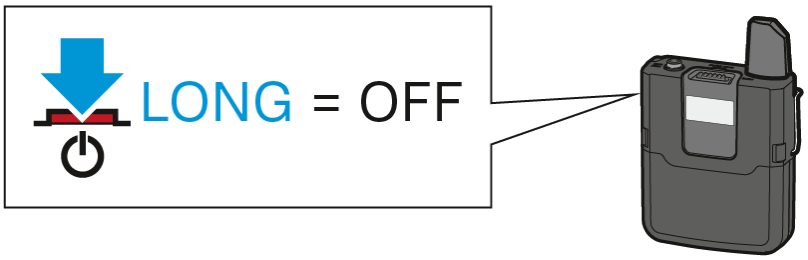

Muting the SK AVX bodypack transmitter

Both the bodypack transmitter and the SKM-S AVX handheld transmitter have a **Mute** switch that mutes the audio signal without switching the transmitter off.

- Slide the **Mute** switch to the position Mute

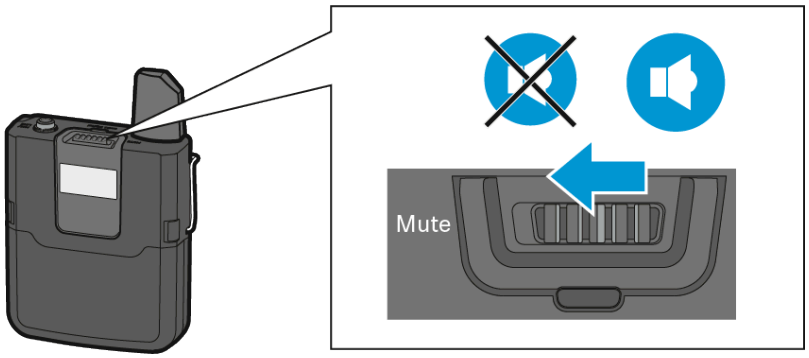

✓ **Muted** appears on the display panel of the transmitter.

The status LED on both the transmitter and the paired receiver lights up yellow.

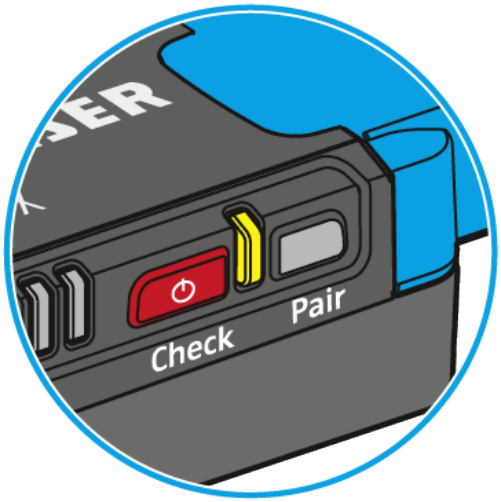

- Slide the **Mute** switch to the position Mic to unmute the audio signal.

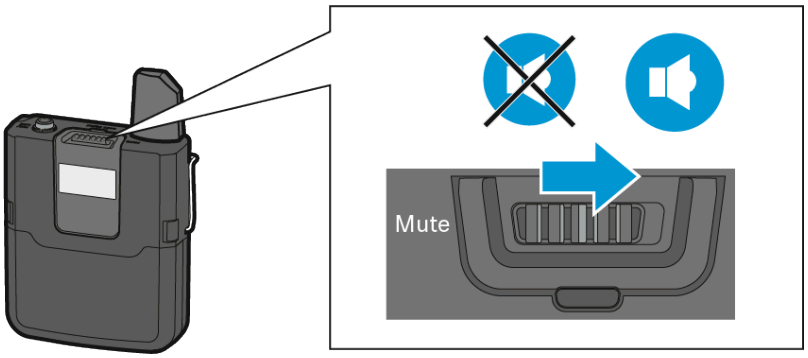

Checking the charge status of the accupacks

The expected remaining battery life of the accupack is indicated by a battery icon on the transmitter display panel.

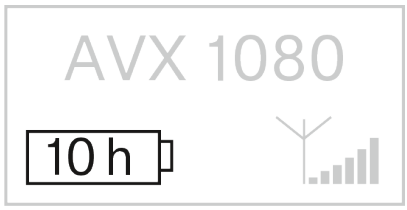

When the capacity of the accupack is so low that the remaining battery life is less than 30 minutes, the status LED on both the transmitter and the receiver flashes red.

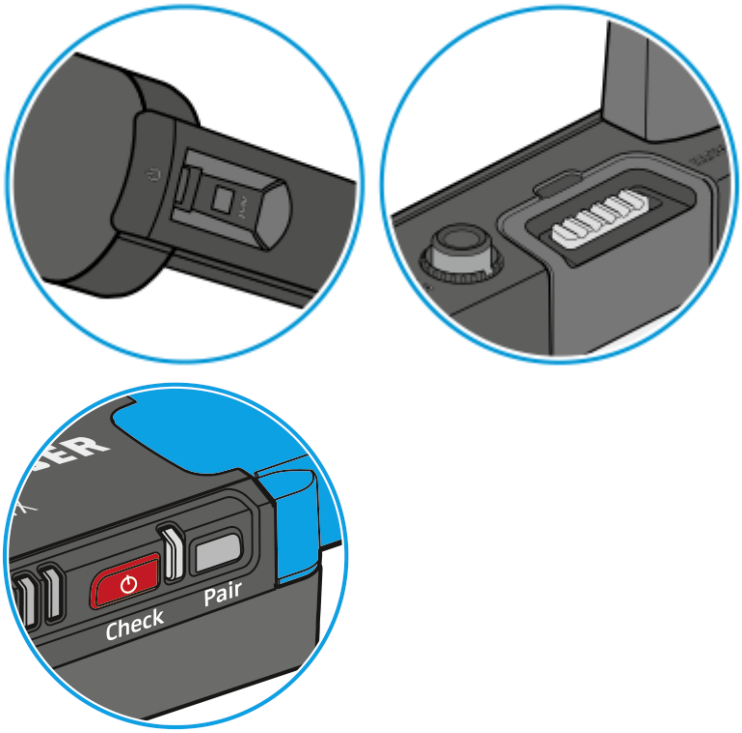

In addition, the empty battery icon flashes on the display panel of the transmitter.

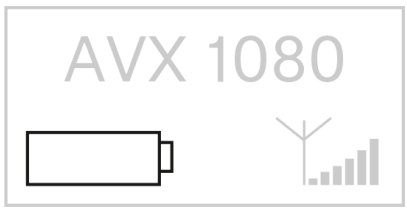

Checking the RF signal level

The quality of the RF signal is shown on the display panel of the transmitter.

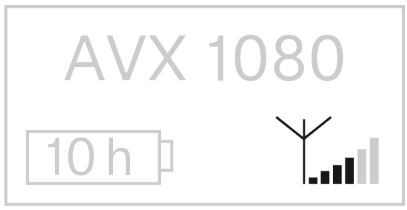

If no RF signal is being transmitted, e.g. because the receiver is switched off or out of range, all segments of the RF signal level display are grayed out. In addition, No Link ⚠ is displayed on the display panel.

Establishing a radio link | Synchronizing the receiver and transmitter

Putting the products into operation

Using the products

AVX offers true ease of use:

- The devices of a set are factory pre-paired and ready for immediate use.
- The system features automatic frequency management and automatically searches for free transmission frequencies.
- AVX also features automatic interference management and inaudibly shifts to a new frequency if interference occurs.
- The system also sets the correct microphone sensitivity automatically.

> **i** After switch-on, the receiver and the transmitter will take approx. 10 seconds to establish the radio link. The more sources of interference there are and the more AVX devices you switch on, the longer it takes to establish the radio links.

Avoiding sources of interference

Featuring automatic interference management, the devices are capable of avoiding interfering signals at any time by automatically moving together to unused frequencies in the 1.9 GHz frequency band, without any audio interruption. However, the number of usable radio links is reduced if there are active sources of interference in the vicinity of the devices.

- Maintain a distance to sources of interference in the 1.9 GHz frequency band.

Possible sources of interference are e.g. base stations of DECT telephones.

WiFi, Bluetooth, Sennheiser ew D1, infrared remote controls and headphones as well as UHF radio links such as Sennheiser evolution wireless G3 do not represent sources of interference. You do not have to maintain a distance to such equipment.

Direct line of sight

Walls and other obstacles will reduce the range. Therefore, there should always be a direct line of sight between the transmitting antenna and the receiving antenna of a radio link.

Pairing a receiver with a transmitter

> **i** The receiver and the transmitter of a set are factory pre-paired and therefore ready for immediate use. The radio link is automatically established as soon as both devices are switched on. You can disconnect the existing radio link and establish new radio links to two other devices.

To establish a new radio link between a receiver and a transmitter, proceed as follows:

- Switch on the receiver and the transmitter that you want to pair (see EKP Switching the EKP AVX on or off, SKM Switching the SKM AVX on or off and SK Switching the SK AVX on or off).
  - ✓ The status LED on both the receiver and the transmitter indicates the current device status (see LED display, LED display and LED display).
- Long-press, one after the other, the **Pair** buttons of the receiver and the transmitter to be paired until their status LEDs flash alternately green and red. You have 120 seconds between pressing the first button and the second button.

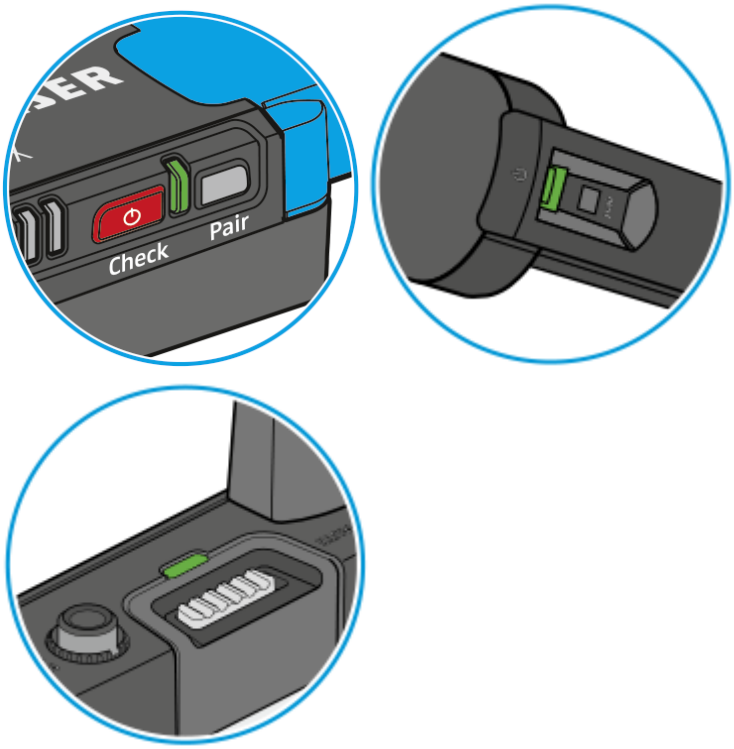

  - ✓ **Press pair on receiver** appears on the transmitter display panel.

Existing radio links to other devices are now disconnected.

▶ Wait for approx. 10 seconds until the radio link is established.

- Once the radio link is successfully established, **Paired** appears on the transmitter display panel and the status LED on both the transmitter and the receiver lights up green.
- If no radio link can be established, **Pairing failed** briefly appears on the transmitter display panel, followed by the message **No Link** ⚠. The status LED of the transmitter and/or the receiver lights up red.

Identifying paired devices

You can perform a pairing identification to see which transmitter is paired with which receiver.

- Switch on all devices whose pairing you want to identify (see Switching the EKP AVX on or off, Switching the SKM AVX on or off and Switching the SK AVX on or off).
- Short-press the **Pair** button of the receiver or of the transmitter.
  - The transmitter display panel displays the message **This is AVX** and the last four digits of the serial number of the paired receiver. The status LEDs of the paired devices flash green for 10 seconds.

If the receiver or the transmitter is not paired or if the paired device is not switched on or out of range, the status LED does not flash green.

Displaying or adjusting the receiver‘s audio output level

To display and correctly adjust the receiver‘s output level:

- Make sure that the radio link is established.
- If your video or DSLR camera has an automatic level control, the automatic level control must be deactivated.
  - The receiver also has an automatic level control which cannot be deactivated.

    If both the automatic level control of the video camera and the automatic level control of the receiver are active, they will interfere with one another.

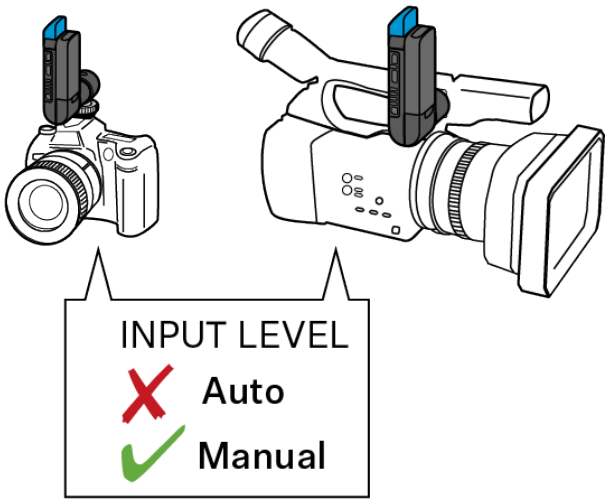

- Short-press the **AF Out** button on the receiver.
  - The 4-step LED display indicates the current output level. This display automatically goes off after a while.

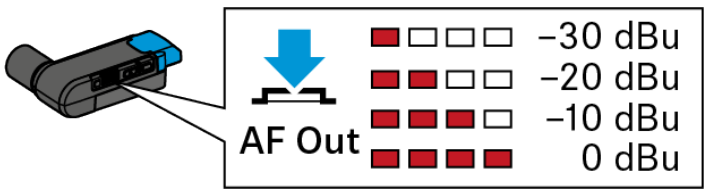

- Check the output level display on the video or DSLR camera while using the microphone as usual.

- The output level is adjusted correctly when the output level display shows full deflection only during the loudest passages. If your video or DSLR camera has a clipping display, this must never light up.

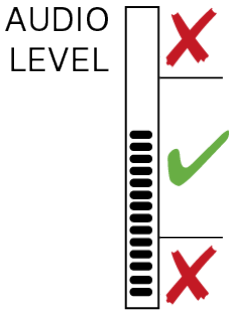

If the output level is adjusted to low or too high:

- Short-press the **AF Out** button on the receiver while the 4-step LED display is active.
  - The audio output level is reduced by one step each time the **AF Out** button is pressed. When the lowest output level has been reached, you can press the **AF Out** button again to reset the receiver to the highest output level.
- Alternatively, you can also adjust the input sensitivity of the video camera.

ME 2 clip-on microphone

Product overview

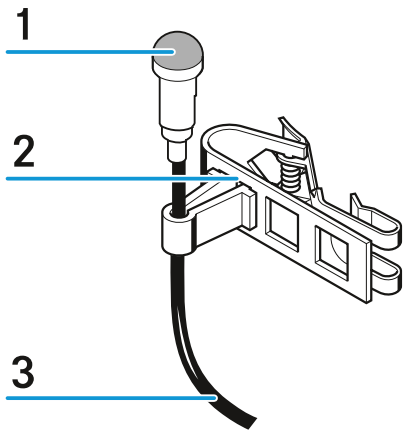

1 Microphone capsule

- with omni-directional pick-up pattern

2 Microphone clip

- see Attaching the clip-on microphone to clothing

3 Connection cable (1.6 m) with lockable 3.5 mm jack plug

- see Connecting a clip-on microphone to the bodypack transmitter

Attaching the clip-on microphone to clothing

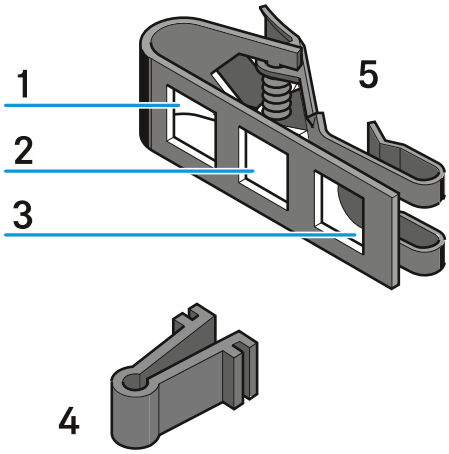

The ME 2 is supplied with a microphone clip that consists of two parts:

- **4** a microphone holder
- **5** a clip for attaching the microphone to clothing

The clip has three holes. Inserting the microphone holder into one of the holes influences the clip‘s contact pressure and thus ensures secure attachment of the clip to clothing made of different materials:

- Hole 1: for attaching the microphone clip to clothing made of very heavy and tightly-woven materials
- Hole 2: for attaching the microphone clip to clothing made of medium heavy materials
- Hole 3: for attaching the microphone clip to clothing made of very thin materials

▶ Snap the connection cable of the ME 2 into the microphone holder.

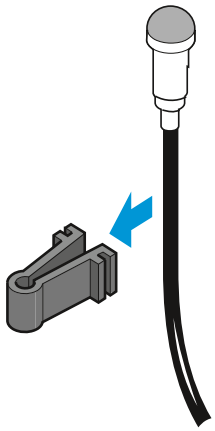

- Insert the microphone holder into the desired hole of the microphone clip. To do so, press the two ends of the microphone holder together and hook it into the hole.
  - The microphone clip can be attached to clothing either vertically or horizontally.

    Make sure to insert the microphone holder into the hole according to the desired orientation of the microphone clip.

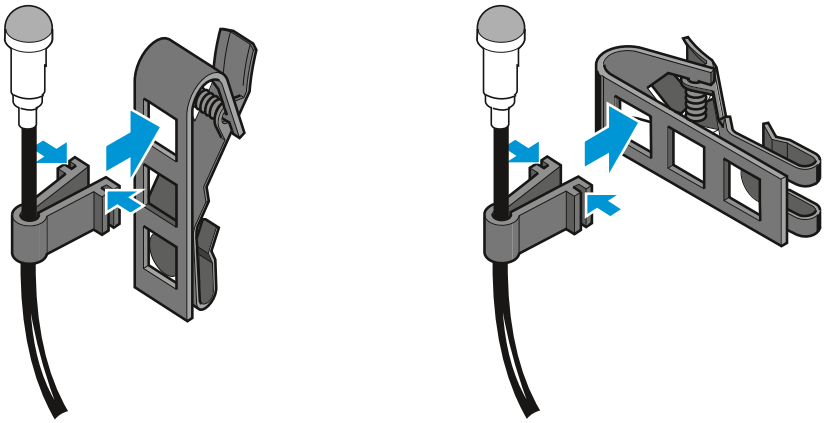

To vertically attach the microphone clip to clothing:

- Guide the connection cable through the cable grip of the clip.

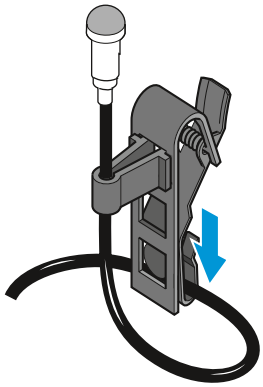

- Use the microphone clip to attach the clip-on microphone to clothing (e.g. lapel, collar, tie).
- Conduct the connection cable so that noise due to friction is avoided and that the connection cable and the antenna do not cross.
- Attach the microphone at a distance of approx. 25 cm to the mouth.

The ME 2 clip-on microphone has an omni-directional pick-up pattern. It is therefore not necessary to position it precisely.

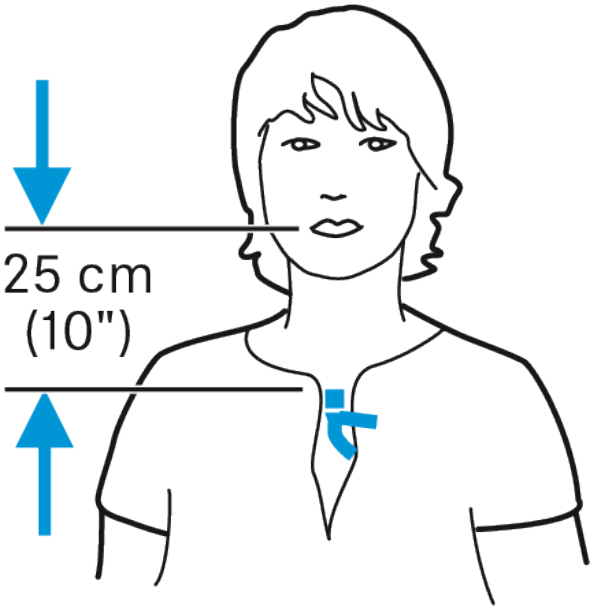
25 cm
(10")

MKE 2 clip-on microphone

Product overview

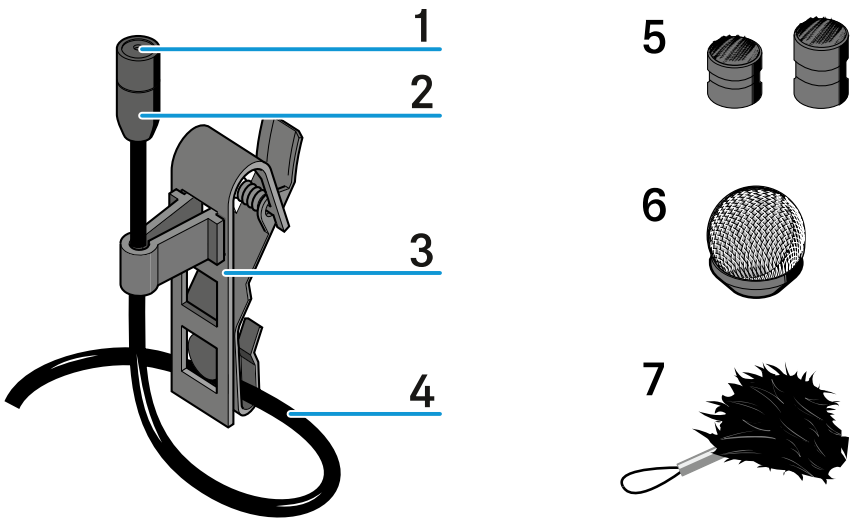

1 Microphone capsule

- with omni-directional pick-up pattern

2 Anti-kink protection

- to prevent cable damage

3 Microphone clip

- see Attaching the clip-on microphone to clothing

4 Connection cable (1.6 m) with lockable 3.5 mm jack plug

- see Connecting a clip-on microphone to the bodypack transmitter

5 Frequency response caps for sound optimization

- see Using the frequency response caps

6 Metal windshield

- see Use the metal windshield

7 Fur windshield

- see Use the fur windshield

Using the frequency response caps

You can use the supplied frequency response caps to boost the frequency response of the MKE 2 (e.g. if the sound is too muffled) and to optimize your recordings by improving the speech intelligibility.

- Slip the frequency response cap of your choice onto the microphone capsule until it locks into place.
  - The (small) MZC 2-1 frequency response cap slightly increases the treble response of the microphone.

  The (large) MZC 2-2 frequency response cap allows you to increase the treble frequencies to a greater extent.

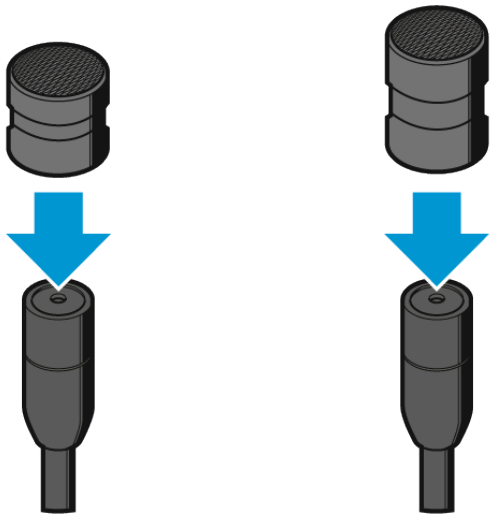

Using the windshield

In order to avoid annoying wind noise during recording, we recommend using a suitable windshield.

The MKE 2 is supplied with a metal windshield and a fur windshield. To begin with, use the metal windshield which reduces wind noise by up to 20 dB. With the additional fur windshield, you can reduce wind noise by a further 10 dB.

The fur windshield can only be used together with the metal windshield.

To use the metal windshield:

- Slip the metal windshield onto the microphone capsule of the MKE 2.
  - The microphone is ready for operation and can be attached to clothing by means of the supplied microphone clip (see Attaching the clip-on microphone to clothing).

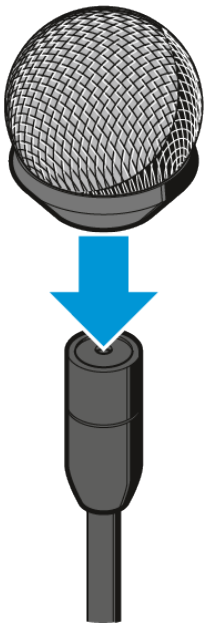

To use the fur windshield:

- If you are already using the metal windshield or one of the frequency response caps, remove them from the microphone capsule.
- Stretch open the retaining loop of the fur windshield by moving the sleeve towards the fur.
- Make sure you do not accidentally remove the sleeve from the retaining loop.
- Pass the microphone through the retaining loop of the fur windshield.
  - The retaining loop now fits loosely around the connection cable of the MKE 2.

- Slip the metal windshield onto the microphone capsule.

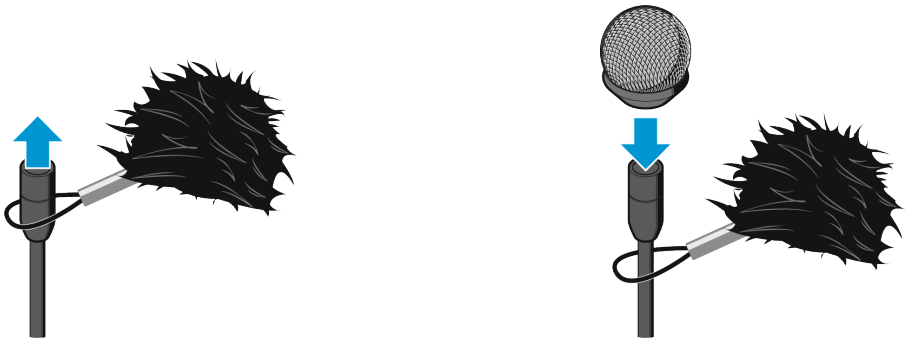

- Carefully stretch the opening of the fur windshield and slide it over the metal windshield.
- Make sure that the fur windshield completely covers the metal windshield.
- Use the sleeve to tighten the retaining loop around the connection cable.
  - The retaining loop ensures that the fur windshield is securely attached to the clip-on microphones.

Attaching the clip-on microphone to clothing

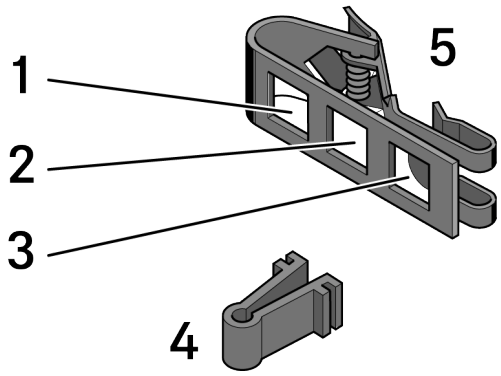

The MKE 2 is supplied with a microphone clip that consists of two parts:

- **4** a microphone holder
- **5** a clip for attaching the microphone to clothing

The clip has three holes. Inserting the microphone holder into one of the holes influences the clip's contact pressure and thus ensures secure attachment of the clip to clothing made of different materials:

- Hole 1: for attaching the microphone clip to clothing made of very heavy and tightly-woven materials
- Hole 2: for attaching the microphone clip to clothing made of medium heavy materials
- Hole 3: for attaching the microphone clip to clothing made of very thin materials

▶ Snap the connection cable of the MKE 2 into the microphone holder.

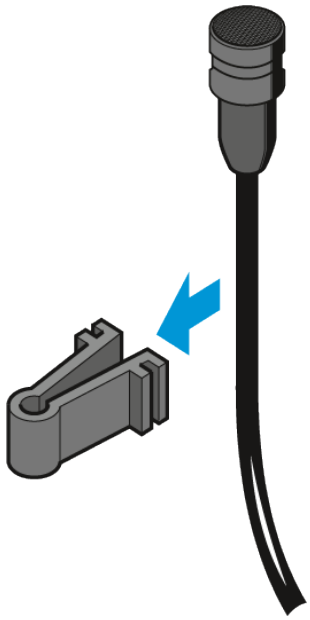

- Insert the microphone holder into the desired hole of the microphone clip. To do so, press the two ends of the microphone holder together and hook it into the hole.
  - The microphone clip can be attached to clothing either vertically or horizontally.

    Make sure to insert the microphone holder into the hole according to the desired orientation of the microphone clip.

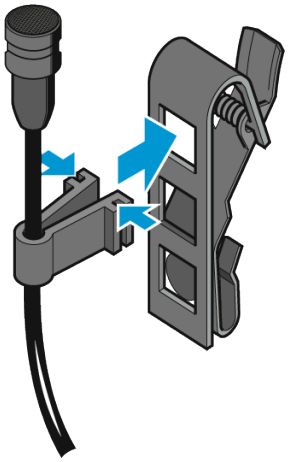

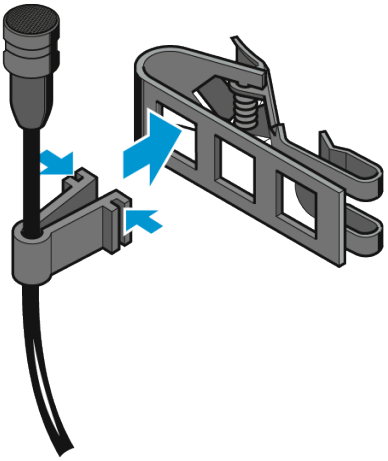

To vertically attach the microphone clip to clothing:

- Guide the connection cable through the cable grip of the clip.

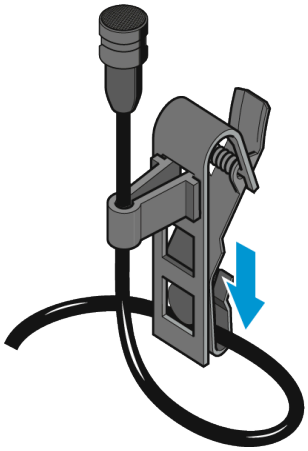

- Use the microphone clip to attach the clip-on microphone to clothing (e.g. lapel, collar, tie).
- Conduct the connection cable so that noise due to friction is avoided and that the connection cable and the antenna do not cross.
- Attach the microphone at a distance of approx. 25 cm to the mouth.

The MKE 2 clip-on microphone has an omni-directional pick-up pattern. It is therefore not necessary to position it precisely.

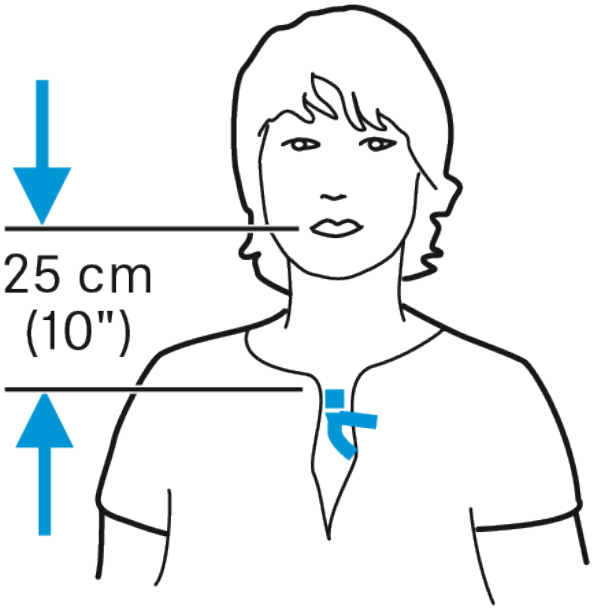
25 cm
(10")

Accupacks

BA 10

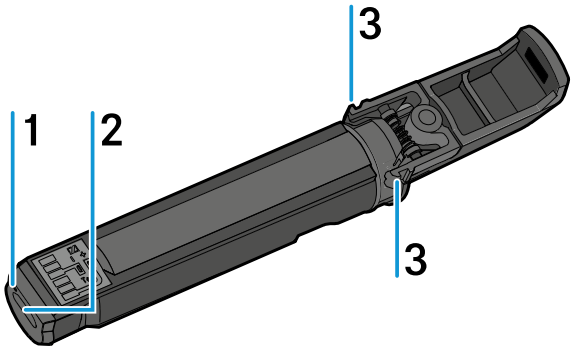

1 Charge status LED

- The accupack is fully charged.
- The accupack is being charged.

2 Micro USB socket

- For charging the accupack.
- See Recharging the accupack

3 Catches

- Press simultaneously to release the accupack from the handheld transmitter.

BA 20

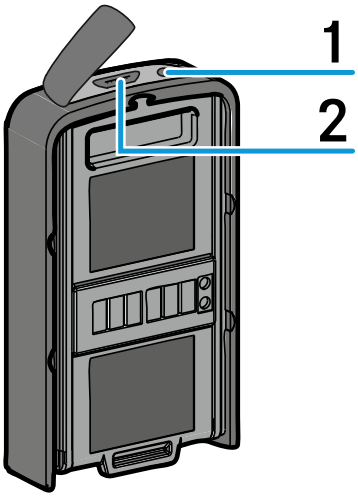

1 Charge status LED

- The accupack is fully charged.
- The accupack is being charged.

2 Micro USB socket

- For charging the accupack.
- See Recharging the accupack

BA 30

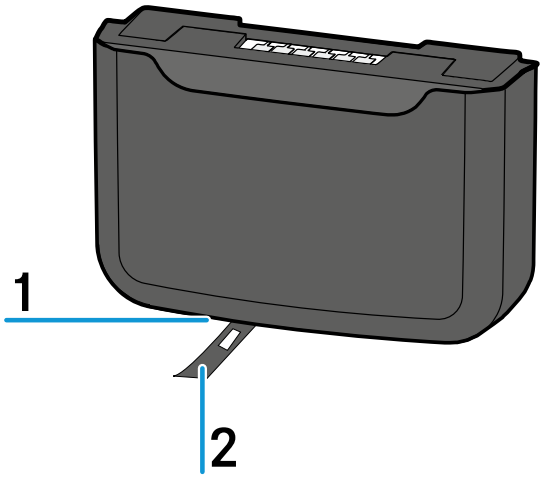

1 Charge status LED

- The accupack is fully charged.
- The accupack is being charged.

2 USB cover flap

- Covers the micro USB socket for charging the accupack.
- See Recharging the accupack

Recharging the accupack

You can recharge the supplied BA 10, BA 20 and BA 30 accupacks as follows:

- using a standard USB power supply/charger
- via the USB port of a computer
- via a USB hub with its own power supply
- via a mobile USB power supply (power bank)

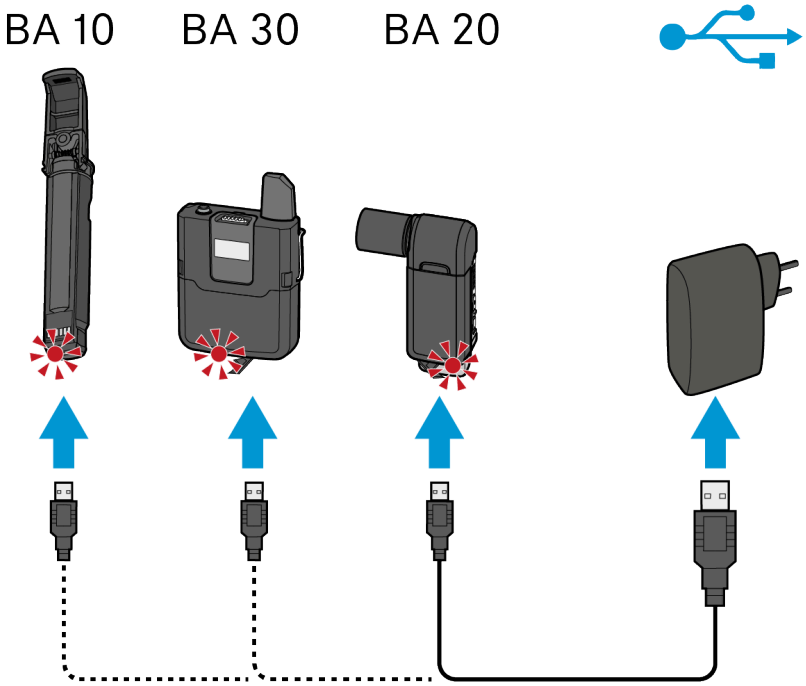

Charging the accupacks using a standard USB power supply/charger

> i The BA 20 accupack of the receiver and the BA 30 accupack of the bodypack transmitter can remain in their respective devices for charging.

- **BA 10**: Remove the accupack from the handheld transmitter (see Removing/inserting the accupack BA 10).
- If the accupack's micro USB socket has a cover flap: Open the cover flap of the micro USB socket of the accupack.
- Connect the micro USB connector of the USB cable to the micro USB socket of the accupack.

To charge the accupack via the USB port of a computer or a mobile USB power supply (power bank):

- Connect the USB connector of the USB cable to a USB socket of the computer or the mobile USB power supply.
- Switch the computer or the mobile USB power supply on.

To charge the accupack using any USB power supply/charger or a USB hub with external power supply:

- Connect the USB connector of the USB cable to the USB socket of the USB power supply/charger or to the USB hub.
- Plug the USB power supply/charger or the power supply unit of the USB hub into the wall socket.
  - The charge status LED of the accupack lights up red when the accupack is being charged. The charge status LED of the accupack lights up green when the accupack is fully charged.

Charging time

Charging time required for a capacity of	BA 10	BA 20	BA 30
30 %	1:00 h	0:15 h	1:00 h
60 %	2:00 h	0:30 h	2:00 h
75 %	3:00 h	0:40 h	3:00 h
100 %	4:30 h	1:15 h	4:30 h

Cleaning and maintenance

Note the following information when cleaning and maintaining products of the AVX series.

NOTICE

Liquids can damage the electronics of the product

Liquids entering the product housing can cause a short-circuit and damage the electronics.

- Keep all liquids away from the products.
- Do not use any solvents or cleansing agents.
- Disconnect the mains-operated products from the power supply system and remove rechargeable batteries and batteries (if present) before you begin cleaning.
- Clean all products only with a soft, dry cloth.

- Note the special cleaning instructions below for the following products.

Cleaning the sound inlet basket of the microphone module

- Unscrew the top sound inlet basket from the microphone module by turning it counterclockwise.
- Remove the foam insert.

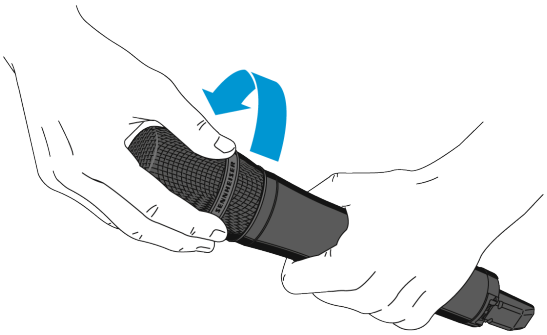

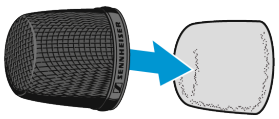

i You can clean the sound inlet basket in two ways:
- Use a slightly damp cloth to clean the top sound inlet basket from the inside and outside.
- Use a brush and rinse with clean water.

- If necessary, clean the foam insert with a mild detergent or replace the foam insert.
- Dry the top sound inlet basket and foam insert.

- Reinsert the foam insert.
- Screw the sound inlet basket back onto the microphone module.

> i From time to time, you should also clean the microphone module contacts:

- Wipe the contacts of the microphone module with a soft, dry cloth.

Cleaning the bodypack transmitter contacts

- Wipe the contacts with a dry cloth.

4. Specifications

All specifications at a glance.

System

AF frequency response

- 20 to 20,000 Hz

Dynamic range

- > 120 dB (A)

THD (1 kHz)

- Typ. 0.1 %

Audio Sampling

- 24 bit/48 kHz

Signal-to-noise ratio

- > 90 dB (A)

RF frequency ranges

- 1880 to 1930 MHz (country-specific)

Modulation

- GFSK with back channel

Transmission method

- TDMA fast switching antenna diversity

Latency

- 19 ms

Relative air humidity

- Max. 95 %

Operating temperature range

- –10 °C to +55 °C

Storage temperature range

- –20 °C to +70 °C

EKP AVX

RF sensitivity

- < –90 dBm

RF output power of back channel

- Typ. 15 dBm e.i.r.p.

Audio output: XLR, balanced

- Adjustable: –30 dBu to 0 dBu in 4 steps

Power supply

- BA 20 (Li-Ion 3.7 V DC)

Operating time

- > 4 h

AF connection socket

- XLR, male

Dimensions

- 81 x 51 mm

Weight (incl. accupack)

- approx. 87 g

CL 400

AF connector

- 3.5 mm jack plug, unbalanced
- Connector assignment:

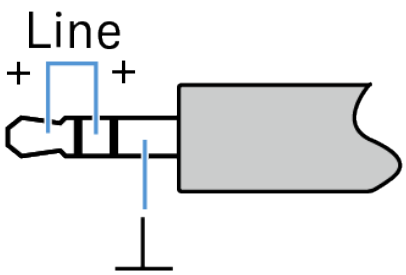

AF connection socket

- XLR, female
- Pin assignment:

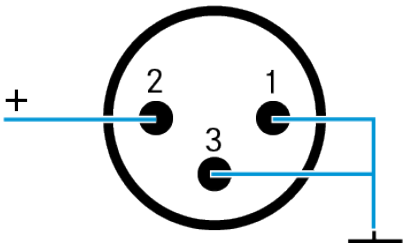

SKM AVX

RF output power

- Adaptive, up to 250 mW (country-specific)

AF frequency response

- 50 to 20,000 Hz

Input sensitivity

- Automatic Sensitivity Adjustment

Power supply

- Accupack BA 10 (Li-Ion, 3.6 V)

Operating time with accupack

- Typ. 15 h

Display

- LCD

Dimensions

- Approx. 275 x 40 mm

Weight (without accupack)

- Approx. 282 g incl. microphone head

SK AVX

RF output power

- Adaptive, up to 250 mW (country-specific)

AF frequency response

- Mic: 50 to 20.000 Hz
- Line: 20 to 20,000 Hz

Max. input level

- Mic: 1.5 V RMS
- Line: 3.1 V RMS

Line input impedance

- 1 MΩ

Input sensitivity

- Automatic Sensitivity Adjustment

Power supply

- Accupack BA 30 (Li-Ion, 3.7 V)

Operating time with accupack

- Typ. 15 h

Dimensions

- 100 x 65 x 24 mm

Weight (without accupack)

- Approx. 87 g

AF connection socket

- 3.5 mm jack socket, lockable
- Connector assignment:

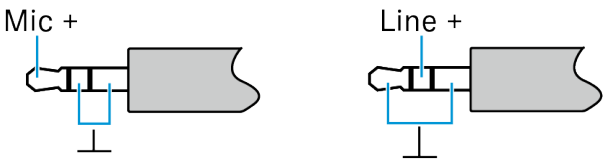

ME 2 | MKE 2

Microphone type

- Pre-polarized condenser microphone

Sensitivity

- ME 2: 17 mV/Pa
- MKE 2: 5 mV/Pa

Pick-up pattern

- Omni-directional

Max. SPL

- ME 2: 130 dB
- MKE 2: 142 dB SPL

BA 10 | BA 20 | BA 30

Charging capacity

- BA 10: 2200 mAh
- BA 20: 430 mAh
- BA 30: 2030 mAh

Output voltage

- BA 10: 3.6 V
- BA 20: 3.7 V
- BA 30: 3.7 V

5. Regulatory information

Information on manufacturer declarations, environmental and disposal notices, and terms of use.

Model: EKP AVX, SK AVX, SKM AVX, SKM-S AVX, BA 10, BA 20, BA 30

Conditions and restrictions for using frequencies

There may be special conditions and restrictions for using frequencies in your country.

Before putting the product into operation, find the information for your country at the following address: sennheiser.com/sifa.

Warranty

Sennheiser electronic SE & Co. KG gives a warranty of 24 months on these products.

For the current warranty conditions, please visit our website at sennheiser.com or contact your Sennheiser partner.

In the US please contact:

Sennheiser Electronic Corporation

1 Enterprise Drive, Old Lyme, CT 06371

www.sennheiser.com

Warranty for Australia and New Zealand only

Sennheiser Australia Pty Ltd provides a warranty of 24 months on these products. For the current warranty conditions, visit Sennheiser website: Australia: sennheiser.com, New Zealand: sennheiser.com

Sennheiser goods come with guarantees that cannot be excluded under Australian and New Zealand Consumer law. You are entitled to a replacement or refund for a major failure and compensation for any other reasonably foreseeable loss or damage. You are also entitled to have the goods repaired or replaced if the goods fail to be of acceptable quality and the failure does not amount to a major failure.

This warranty is in addition to other rights or remedies under law. Nothing in this warranty excludes, limits or modifies any remedy available to be consumer which is granted by law.

To make a claim under this contract, raise a case via Sennheiser website. Australia: sennheiser.com/support, New Zealand: sennheiser.com/support

All expenses of claiming the warranty will be borne by the person making the claim.

Sennheiser international warranty is provided by: Sennheiser Australia Pty Ltd (ABN 68 165 388 312) Level 14, Tower A Zenith Building, 821 Pacific Highway, Chatswood NSW 2067, Australia

Europe

In compliance with the following requirements

- Regulation (EU) 2023/988 on general product safety
- WEEE Directive (2012/19/EU)
- Regulation (EU) 2023/1542 concerning batteries and waste batteries

Italy:

Raccolta carta 20 PAP

Raccolta plastica 04 LDPE

France:

FR

Carton d'emballage
+ Film en PE
+ Notice d'emploi en papier

Notes on disposal

The symbol of the crossed-out dumpster on the product, the (rechargeable) battery (if applicable) and/or the packaging indicates that these products must not be disposed of with normal household waste, but must be disposed of separately at the end of their service life. For the packaging, follow the regulations in your country for separating waste. Improper disposal of packaging materials can be harmful to your health and the environment.

The separate collection of waste electrical and electronic equipment, (rechargeable) batteries (if applicable) and packaging is intended to promote reuse and recycling and to prevent negative impacts on public health and the environment, for example due to hazardous substances contained in these products. At the end of their service life, recycle electrical and

electronic equipment and (rechargeable) batteries so that their materials can be reused and to prevent environmental pollution.

If (rechargeable) batteries can be removed without destroying them, you are obliged to dispose of them separately (see the product's operating instructions for information on how to remove the batteries safely). Be especially careful when handling (rechargeable) batteries containing lithium, as these pose special hazards, such as the risk of fire and/or health risks if button cells are swallowed. Reduce battery waste as much as possible by using longer-life batteries or rechargeable batteries.

Further information on the recycling of these products can be obtained from your municipal administration, from the municipal collection points, or from your Sennheiser partner. You may also be able to return electrical or electronic equipment to your distributor, if they are legally required to do so. By disposing of your batteries properly, you are helping to protect public health and the environment.

EU Declaration of conformity

- RoHS Directive (2011/65/EU)

Hereby, Sennheiser electronic SE & Co. KG declares that the radio equipment type c is in compliance with Directive 2014/53/ EU.

The full text of the EU declaration of conformity is available at the following internet address: sennheiser.com/download.

United Kingdom

In compliance with the following requirements

- WEEE Regulations (2013)
- Battery Regulations (2015)

UK Declaration of conformity

- RoHS Regulations (2012)
- Radio Equipment Regulations (2017)

Importer: Sennheiser UK Ltd.

Pacific House, Third Avenue, Globe Park, Marlow

Buckinghamshire SL7 1EY, United Kingdom

USA

Statements regarding FCC and ISED

This device complies with Part 15 of the FCC Rules and with Innovation, Science and Economic Development Canada (ISED) license-exempt RSS standard(s). Operation is subject to the following two conditions: (1) this device may not cause harmful interference, and (2) this device must accept any interference received, including interference that may cause undesired operation.

Changes or modifications not expressly approved by Sennheiser electronic Corp. could void the user's authority to operate the equipment.

Contact information: Sennheiser Electronic Corporation, 1 Enterprise Drive, Old Lyme, CT 06371; sennheiser.com

Radiofrequency radiation exposure Information

This equipment complies with FCC and IC radiation exposure limits set forth for an uncontrolled environment. The EKP AVX should be installed and operated with a minimum distance of 20 cm between the radiator and your body.

SK AVX, SKM AVX, SKM-S AVX: The radiated output power of the device is far below the FCC and ISED radio frequency exposure limits. Nevertheless, the device shall be used in such a manner that the potential for human contact during normal operation is minimized.

EKP AVX, SK AVX, SKM AVX, SKM-S AVX

SK	FCC ID: DMOSK1G9WE
SKM	FCC ID: DMOSKM1G9WE
EKP	FCC ID: DMOEKP1G9WE

Rechargeable battery cells: UL 1642

Accupack: UL 2054

Canada

Statements regarding FCC and ISED

This device complies with Part 15 of the FCC Rules and with Innovation, Science and Economic Development Canada (ISED) license-exempt RSS standard(s). Operation is subject to the following two conditions: (1) this device may not cause harmful interference, and (2) this device must accept any interference received, including interference that may cause undesired operation.

Changes or modifications not expressly approved by Sennheiser electronic Corp. could void the user's authority to operate the equipment.

Contact information: Sennheiser Electronic Corporation, 1 Enterprise Drive, Old Lyme, CT 06371; sennheiser.com

Radiofrequency radiation exposure Information

This equipment complies with FCC and IC radiation exposure limits set forth for an uncontrolled environment. The EKP AVX should be installed and operated with a minimum distance of 20 cm between the radiator and your body.

SK AVX, SKM AVX, SKM-S AVX: The radiated output power of the device is far below the FCC and ISED radio frequency exposure limits. Nevertheless, the device shall be used in such a manner that the potential for human contact during normal operation is minimized.

EKP AVX, SK AVX, SKM AVX, SKM-S AVX

SK	IC: 2099A-SK1G9WE
SKM	IC: 2099A-SKM1G9WE
EKP	IC: 2099A-EKP1G9WE

Rechargeable battery cells: UL 1642

Accupack: UL 2054

Australia / New Zealand

R-NZ

Japan

日本の電波法に準拠

本機器は、日本の電波法に準拠しています。

本機器を改変しないでください（守らない場合、付与された指定番号が無効になります）。

Japanese Radio Law Compliance

This device is granted pursuant to the Japanese Radio Law (電波法).

This device should not be modified (otherwise the granted designation number will become invalid).

EKP AVX, SK AVX, SKM AVX, SKM-S AVX

SKM: R 202-SMC049
SK: R 202-SMC050
EKP: R 202-SMC051

BA 10, BA 20, BA 30

PSE

ゼンハイザージャパン（株）

DENAN Ordinance Article 1; Appendix 9 Lithium Ion

Brazil

ANATEL
Agência Nacional de Telecomunicações

SK	05811-17-07356
SKM	05799-17-07356
EKP	05102-18-07356

India

SK, SKM

IS 616/IEC 60065

R-41196606
www.bis.gov.in

South Korea

BA 10, BA 20, BA 30

Safety: K 62133

UN transportation test

BA 10, BA 20, BA 30: according to UN Manual of Tests and Criteria, Part III, section 38.3 Lithium-Ion batteries

Vietnam

Kể từ ngày 1 tháng 12 năm 2012, các sản phẩm được sản xuất bởi Sennheiser tuân thủ Thông tư 30/2011/TT-BCT quy định về giới hạn cho phép đối với một số chất độc hại trong các sản phẩm điện và điện tử.

China

EKP AVX, SK AVX, SKM AVX, SKM-S AVX

China RoHS 15

部件名称 (Parts)	有害物质										
	铅 (Pb)	汞 (Hg)	镉 (Cd)	六价铬 (Cr6+)	多溴联苯 (PBB)	多溴二苯醚 (PBDE)	邻苯二甲酸二(2-乙基己)酯 (DEHP)	邻苯二甲酸丁苄酯 (BBP)	邻苯二甲酸二丁酯 (DBP)	邻苯二甲酸二异丁酯 (DIBP)	产品环保年限 EFUP
金属部件 (Metal parts)	x	o	o	o	o	o	o	o	o	o	15
电路模块 (Circuit Modules)	x	o	o	o	o	o	o	o	o	o	15
电缆及电缆组件 (Cables & Cable Assemblies)	x	o	o	o	o	o	o	o	o	o	15
电路开关 - 如果包含 (Circuit Breakers - if available)	x	o	o	o	o	o	o	o	o	o	15
非电子附件/耗材 Non-electrical accessories / consumables	x	o	o	o	o	o	o	o	o	o	10
电池 - 如果包含 (battery - if available)	x	o	o	o	o	o	o	o	o	o	5

本表格依据 SJ/T 11364 的规定编制。
o: 表示该有害物质在该部件所有均质材料中的含量均在GB/T 26572 规定的限量要求以下。
x: 表示该有害物质至少在该部件的某一均质材料中的含量超出GB/T 26572 规定的限量要求。

CL 400, EKP AVX adapter

China RoHS 15

部件名称 (Parts)	有害物质										
	铅 (Pb)	汞 (Hg)	镉 (Cd)	六价铬 (Cr6+)	多溴联苯 (PBB)	多溴二苯醚 (PBDE)	邻苯二甲酸二(2-乙基己)酯 (DEHP)	邻苯二甲酸丁苄酯 (BBP)	邻苯二甲酸二丁酯 (DBP)	邻苯二甲酸二异丁酯 (DIBP)	产品环保年限 EFUP
金属部件 (Metal parts)	x	o	o	o	o	o	o	o	o	o	15

本表格依据 SJ/T 11364 的规定编制。
o: 表示该有害物质在该部件所有均质材料中的含量均在GB/T 26572 规定的限量要求以下。
x: 表示该有害物质至少在该部件的某一均质材料中的含量超出GB/T 26572 规定的限量要求。

6. Contact

Contact information in case of questions about our products and/or services.

Sennheiser electronic SE & Co. KG | Am Labor 1 | 30900 Wedemark | Germany