SM4

Cardioid Condenser Home Recording Microphone

Manual for the Shure SM4 cardioid condenser microphone and SM4-K-KIT. Find specifications, setup, tips, and how to replace the shock mount rubber bands.

Version: 1.6 (2026-I)

Table of Contents

SM4 Cardioid Condenser Home Recording Microphone **3**

About the Shure SM4 **3**

Important Safety Instructions 3

Features 3

What's in the Box 3

SM4 Replacement Parts 4

Getting Started **4**

SM4 Specifications **6**

Placement **8**

Applications and Placement 9

Replace Bands on the Shock Mount **10**

Install or Remove the Stand Adapter **10**

Additional Resources **11**

Mic Acoustic Guitar with the SM4 11

How to Avoid Plosives When Recording 11

See also 11

Important Product Regulatory Information **11**

Environmental Regulatory Information 11

Certification and Compliance Markings 12

SM4
Cardioid Condenser Home Recording Microphone

About the Shure SM4

The Shure SM4 is a versatile side-address cardioid condenser microphone made for recording. The mic is engineered to deliver precise, natural audio, with integrated features that ensure professional results in modern home and professional spaces. Its patent-pending Interference Shielding Technology blocks unwanted RF noise from cell phones, laptops, and Wi-Fi routers, while a dual-stage pop-filtering system minimizes unwanted plosive sounds.

The SM4 microphone comes with a swivel-mount microphone clamp (SM4-K), and is available in a studio kit option (SM4-KIT) that includes a low-profile shock mount system with a removable magnetic pop filter and a zippered carrying case.

Important Safety Instructions

WARNING

- If water or other foreign objects enter the inside of the device, fire or electric shock may result.
- Do not attempt to modify this product. Doing so could result in personal injury and/or product failure.

CAUTION

- Never disassemble or modify the device, as failures may result.
- Do not subject to extreme force and do not pull on the cable or failures may result.
- Keep the product dry and avoid exposure to extreme temperatures and humidity.

Features

- Dual-diaphragm design captures consistent, controlled lows and smooth, detailed highs.
- Best-in-class shielding (patent pending) reduces interference from phones, tablets, Wi-Fi, laptops, or radio.
- Sensitivity optimized to ensure the mic works with any interface and captures a wide range of sound sources from soft vocals to handling the loudest instruments, including high-SPL sources like drums, and guitar amps, and horns.
- Rugged all-metal construction increases durability.
- Sleek, low-profile design for professional video content that won't obscure the performer or environment.
- Premium suspension shock mount system dampens undesired mechanical noise, rumbles and vibrations.*
- Detachable, magnetic pop filter designed to attach to the SM4 shock mount. When combined with the internal pop filter of the SM4 Microphone, this dual-stage filtering system dramatically increases the resistance of undesired plosive "pop" sounds.*

*SM4-K-KIT only

What's in the Box

SM4-K: SM4 microphone, swivel-mount microphone clamp, brass mic stand adapter, zippered pouch.

SM4-K-KIT: SM4 microphone, magnetic pop filter, shock mount, brass mic stand adapter, zippered carrying case.

SM4 Replacement Parts

- A4M Swivel Hardmount
- A4SM Shock Mount
- A4EB Rubber Bands for Shock Mount
- A4PF Magnetic Pop Filter
- A4CC Softshell Carrier
- 31B1856 Brass Adapter

Getting Started

1. Secure the microphone in the included mount and attach it to a microphone stand.

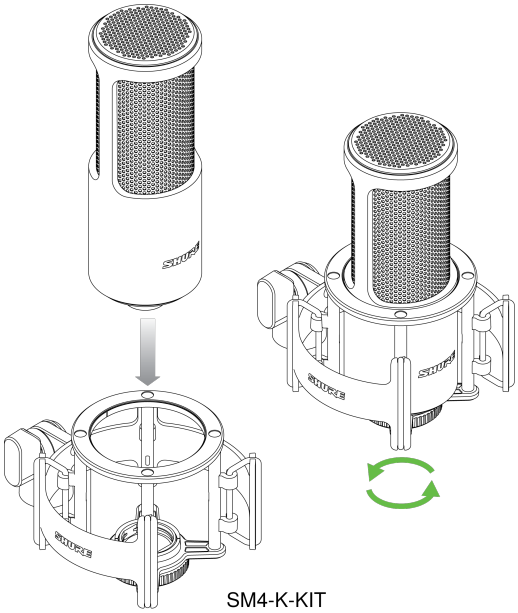

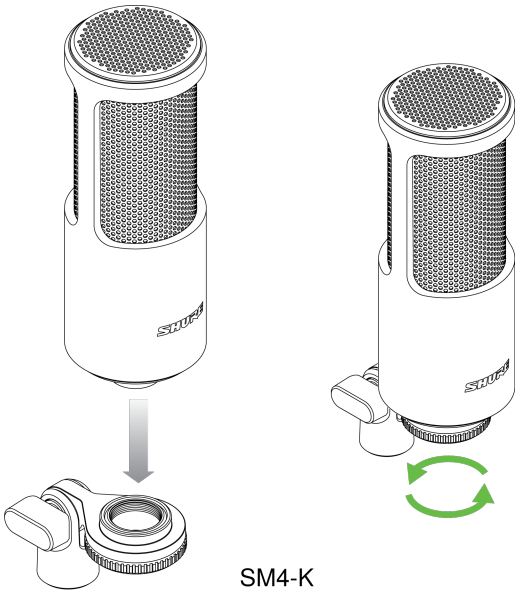

2. Adjust the mic's position and height. If desired, attach the magnetic pop filter.*

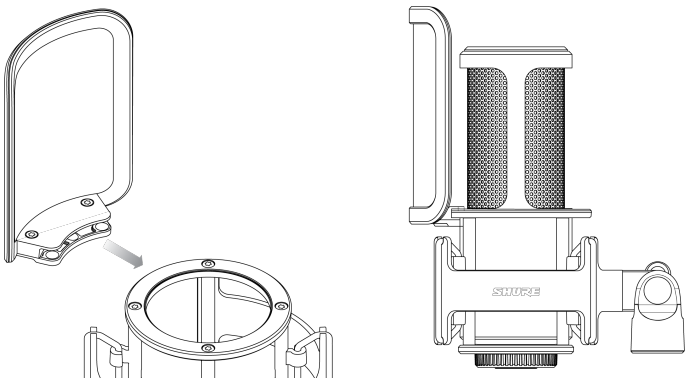

*Available with the SM4-K-KIT

3. Connect the microphone to an audio interface with an XLR cable and activate phantom power on your audio interface or mixer.

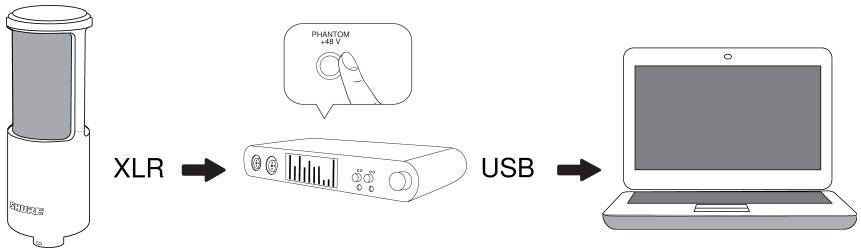

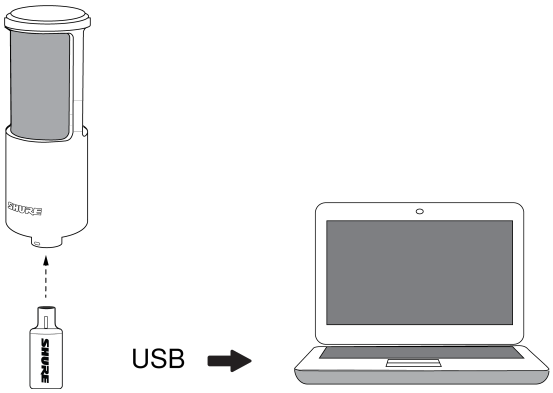

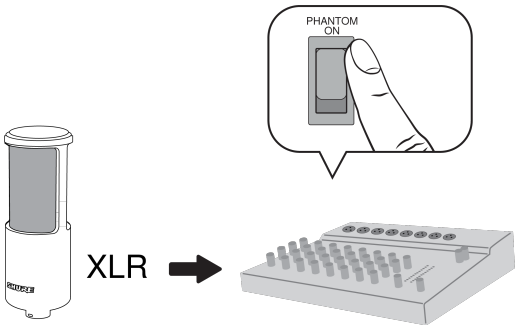

Important: This microphone needs a +48 V DC phantom power supply. Most mixers or interfaces have a switch or button to activate phantom power.

SM4 Specifications

Frequency Response: 20 to 20,000 Hz

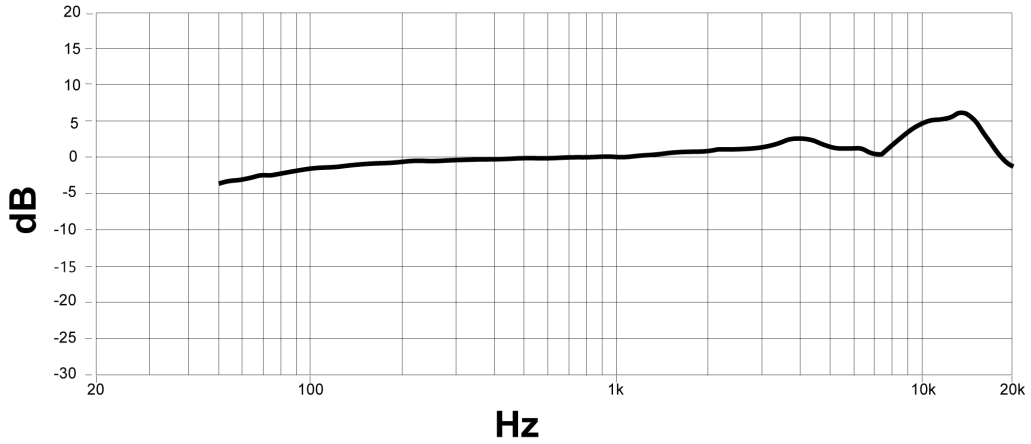

SM4 Frequency Response

Polar Pattern: Cardioid

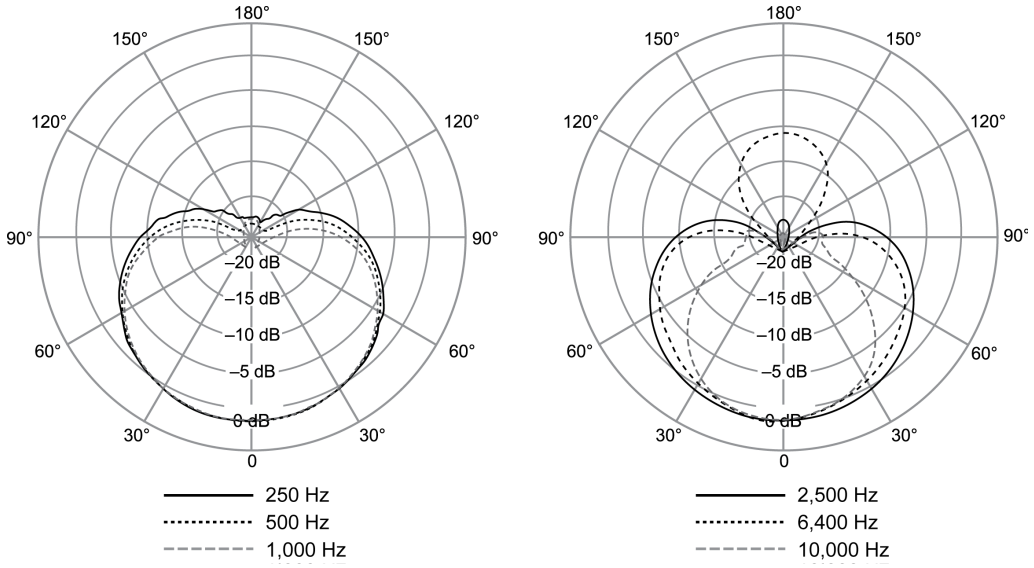

SM4 Polar Pattern

Type: Condenser (externally biased)

Output Impedance *at 1 kHz, open circuit voltage* : 150 Ω

Sensitivity *at 1 kHz, open circuit voltage* : -38 dBV/Pa [1] (17.8 mV)

Signal-to-Noise Ratio: 79 dB

Maximum SPL *1 kHz at 1% THD, 1 kΩ load* : 140 dB SPL

Self-Noise *A-weighted, typical* : 13 dB SPL

Dynamic Range *1 kΩ load* : 125 dB

Polarity: Positive pressure on diaphragm produces positive voltage on pin 2 with respect to pin 3

Connector: Three-pin professional audio (XLR), male

Weight: 463 g (1.02 lbs)

Housing: Die Cast Zinc

Power Requirements: 48 V DC phantom power (5.3 mA)

Dimensions:

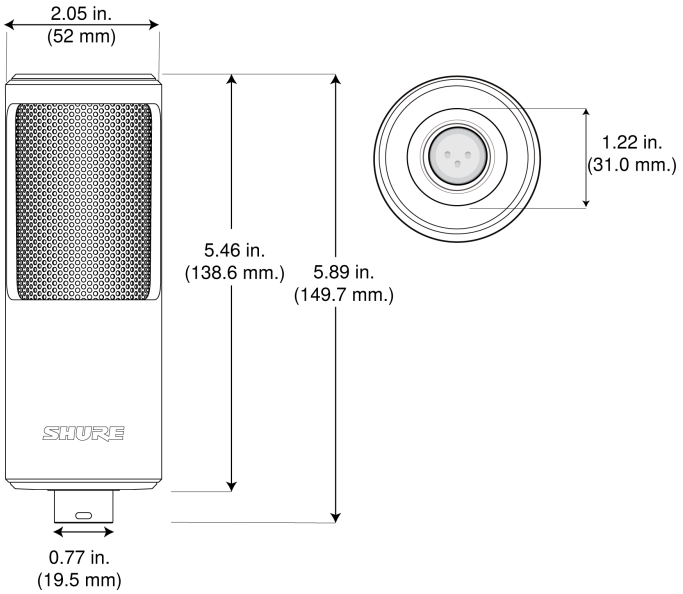

[1] 1 Pa=94 dB SPL

Placement

Note: Cardioid microphones reject sound from the back. Make sure the logo on the front of the mic faces your sound source.

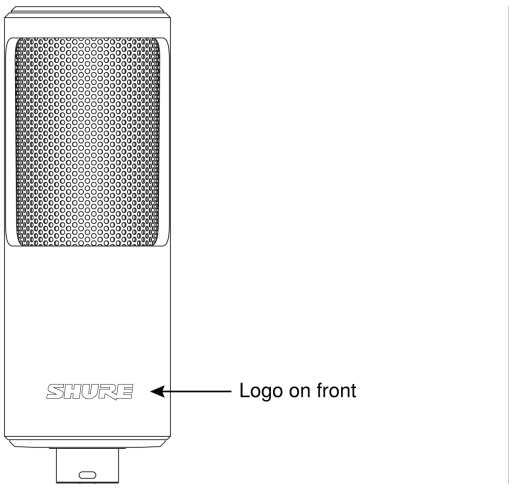

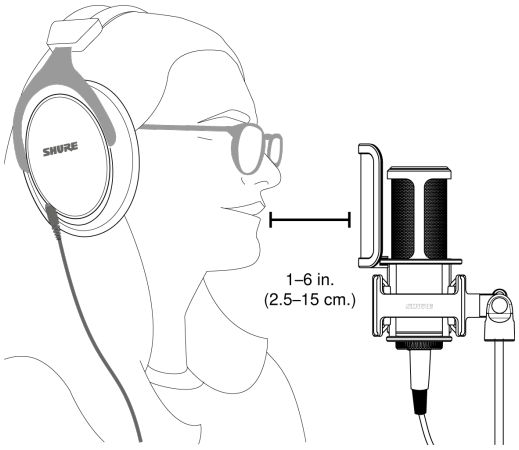

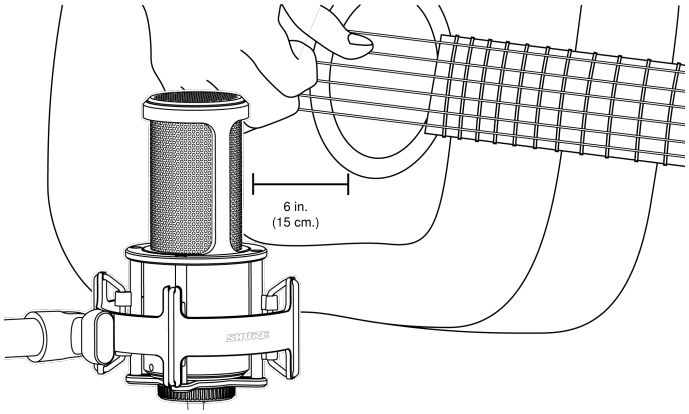

Applications and Placement

Large Diaphragm Condenser Applications and Placement

Application	Distance from source	Tips
Vocals and speech	1–6 inches (2–15 cm)	Use a pop filter to prevent plosives.
Acoustic guitar	6–12 inches (15–30 cm)	Place near the sound hole or the twelfth fret for a balanced, natural sound.
Drums	3–6 feet (1–2 m)	Place in front of the drum kit to capture more of the kick drum, or as an overhead (above the kit, facing down) to capture more cymbals. Consider using additional Shure microphones on individual drums for more mixing flexibility and a thicker sound.
Strings or horns	1–6 feet (30 cm–2 m)	For a single instrument, place the microphone close to the source. For a horn or string section, arrange players

Application	Distance from source	Tips
		at an equal distance from the microphone.
Woodwinds	2–6 inches (5–15 cm)	Experiment with placement near the sound holes and bells of woodwind instruments.
Amplifiers	1–6 inches (2–15 cm)	Aim towards the center of the speaker for a clear, aggressive sound, or towards the edge of the speaker for a mellow sound. Watch for distortion.

Visit www.shure.com for more on microphone placement and recording techniques.

Replace Bands on the Shock Mount

To replace the rubber bands on the shock mount:

1. Remove the old rubber bands and the inner part of the shock mount.
2. Add new rubber bands to the slots of the outer shock mount.
3. Replace the inner mount with magnets facing the open side, as shown below.
4. Pull the new bands through the hooks on the inner mount.

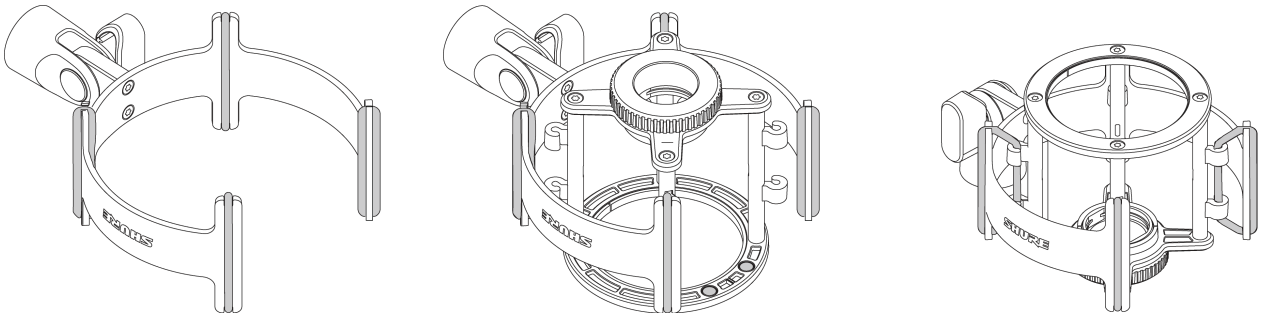

Install or Remove the Stand Adapter

To mount the microphone on a 3/8 in. stand, insert the included brass stand adapter and tighten it with a coin or screwdriver.

Important: Make sure that the slots on the adapter face outward.

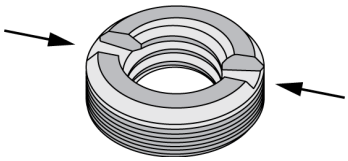

Additional Resources

- Shure Knowledge Base FAQs
- Microphone Techniques for Recording
- Shure Performance & Production YouTube channel
- Shure Creators YouTube channel

Mic Acoustic Guitar with the SM4

How to Avoid Plosives When Recording

See also

- The difference between condenser and dynamic mics
- How a dual-diaphragm mic design reduces the proximity effect.
- How to fix feedback problems.
- What is phantom power?
- How should I clean my microphone?
- What is a noise floor/self-noise?

Important Product Regulatory Information

For information regarding responsible party and other matters relating to FCC compliance, please contact Shure Incorporated, 5800 W. Touhy Avenue, Niles, Illinois 60714-4608 U.S.A. shure.com/contact

Changes or modifications not expressly approved by Shure Incorporated could void your authority to operate this equipment.

CE Notice

Hereby, Shure Incorporated declares that this product with CE Marking has been determined to be in compliance with European Union requirements.

The full text of the EU declaration of conformity is available at the following site: https://www.shure.com/en-EU/support/declarations-of-conformity.

UKCA Notice

Hereby, Shure Incorporated declares that this product with UKCA Marking has been determined to be in compliance with UKCA requirements.

The full text of the UK declaration of conformity is available at the following site: https://www.shure.com/en-GB/support/declarations-of-conformity.

Environmental Regulatory Information

Waste Electrical and Electronic Equipment (WEEE) Directive

In the European Union and the United Kingdom, this label indicates that this product should not be disposed of with household waste. It should be deposited at an appropriate facility to enable recovery and recycling.

Registration, Evaluation, Authorization of Chemicals (REACH) Directive

REACH (Registration, Evaluation, Authorization of Chemicals) is the European Union (EU) and the United Kingdom (UK) chemical substances regulatory framework. Information on substances of very high concern contained in Shure products in a concentration above 0.1% weight over weight (w/w) is available upon request.

Recycling Information

Please consider the environment, electric products and packaging are part of regional recycling schemes and do not belong to regular household waste.

Certification and Compliance Markings