BlacklineX

User Guide

BlacklineX

Signature Sound For Portable + Installation

MARTIN AUDIO
LONDON

Content

Introduction 4
Unpacking 4
BlacklineX Series overview 5
2-way full-range systems: 5
Direct radiating ported sub-bass systems 5
2-way passive full-range systems 6
X8 6
X10 7
X12 8
X15 9
Sub-bass systems 10
X115 10
X118 11
X218 12
Accessories 13
Wall Brackets 13
Eye Bolts 14
Pole Mount 15
Safety first 16
Pole or stand mounting 16
Stacking 16
Rigging and suspension 16
Amplification 17
Choosing a power amplifier 17
Gain Settings 17
Recommended Amplifiers 17
Connections 18
Sub-Woofers With Link A/B Connections 18
Wiring Diagrams 21
System A- basic set-up 21
System B- Introducing a Processor 22
System C- Adding a Mono Sub 23
System D- Adding Subwoofers with a second amplifier 24
System E- Stereo Subwoofers 25
System F – Stereo Subwoofers using the bi-amp wiring facility 26
DX0.4 and DX0.6 27
Introduction 27

Grille Removal and horn Rotation 28
Grille Removal 28
Rotating the high frequency horn 30
Badge Rotation 30
Wall Mounting 33
Eye Bolt Mounting 39
Specifications 40
X8 40
X10 40
X12 41
X15 41
X115 42
X118 42
X218 43
Technical Drawings 44
X8 44
X10 44
X12 45
X15 45
X115 46
X118 46
X218 47
Warranty 48

Introduction

Thank you for purchasing a Martin Audio BlacklineX Series system. With BlacklineX, Martin Audio's R&D team has engineered a classic suite of passive loudspeakers for the modern era. Delivering the signature sound of warmth, nuance and clarity but with improved overall performance at a price point not previously possible, BlacklineX is a clean, smart design with no compromise between the needs of installation and portability. Applications range from portable sound reinforcement and stage monitoring for live bands, DJ's and corporate events, to installations in nightclubs, bars, commercial spaces and Houses of Worship.

Comprising four two-way systems — from the ultra-compact X8 to the powerful X15 — and three subwoofers, the multi-purpose BlacklineX Series raises the performance of loudspeaker systems in its class to a new level. Each symmetrical, multi-angle full-range enclosure features a user-rotatable horn for horizontal or vertical orientation, and has a screw-free, cloth-backed steel grille. Comprehensive mounting options include wall bracket, eyebolt suspension and pole-mounting. Ergonomic handles at the rear of each full-range enclosure make for easy handling while maintaining clean lines for installed systems where handles on the cabinet's side are likely to look obtrusive.

All BlacklineX Series enclosures are constructed from birch/poplar plywood and finished with a durable black textured paint, with white and custom RAL colour options available to order.

Professional and affordable, BlacklineX puts Martin Audio signature sound within easy reach of musicians, DJ's and systems integrators— the Blackline heritage re-imagined for the modern era.

Because the X8, X10, X12 and X15 are passive systems embodying correct acoustic design principles, they can be used without a controller provided their AES and peak power ratings are not exceeded and care is taken to avoid amplifier clipping. For maximum performance, however, we recommend that BlacklineX Series systems are used with the Martin Audio DX0.4 or DX0.6, which are are highly versatile digital loudspeaker processors, economically priced to make an excellent match for the BlacklineX range. A folder of presets for the range is bundled with the DX0.4 and DX0.6 Control Software, which can be downloaded for free from the software section of the Martin Audio website. Alternatively, you could use a Martin Audio DX4.0 system controller. Note that a spreadsheet with parameters for the BlacklineX range is available from the Martin Audio website (go to **Support > Loudspeaker Settings**).

Unpacking

Each Martin Audio BlacklineX Series loudspeaker is built to the highest standard and thoroughly inspected before it leaves the factory. After unpacking the system, examine it carefully for any signs of transit damage and inform your dealer or distributor if any such damage is found. It is suggested that you retain the original packaging so that the system can be repacked at a future date if necessary.

Please note that Martin Audio and its distributors cannot accept any responsibility for damage to any returned product through the use of non-approved packaging.

BlacklineX Series overview

The BlacklineX Series is made up of…

2-way full-range systems:

X8 (8”+ 1”)

X10 (10”+ 1”)

X12 (12”+ 1”)

X15 (15”+ 1”)

Direct radiating ported sub-bass systems

X115 (single 15”, ported)

X118 (single 18”, ported)

X218 (2 x 18”, ported)

2-way passive full-range systems

X8

The X8 is an ultra-compact passive two-way system featuring an 8” (200mm)/2” (50mm) voice coil LF driver and a 1” (25mm) HF driver mounted on a 90° x 50° horn which can be easily rotated for horizontal or vertical orientation. Its very small size gives no indication of its high output capability.

As a stand-alone loudspeaker, it has a multitude of professional applications— from distributed sound reinforcement, Houses of Worship and AV events to front-fill/infill and use as a micro stage monitor. Complemented by a BlacklineX subwoofer, it is the ideal, simple-to-use system for portable applications and installations which call for an unobtrusive system that can deliver pristine sound over short and medium throw distances.

The X8 is constructed from birch/poplar plywood and fitted with a screw-free steel grille, M8 inserts for a wall bracket and eyebolt suspension, plus a pole-mount socket. The X8 may be used with or without a system controller. For demanding applications, Martin Audio recommends a DX0.4 or DX0.6 system controller configured to perform EQ and limiter functions. The DX0.4 or DX0.6 may also be used to configure systems for additional sub-bass cabinets such as the X115 or SX210.

X10

The X10 is a high performance yet very compact two-way passive loudspeaker system which utilises a 10” (250mm)/2.5” (63mm) voice coil LF driver and a 1” (25mm) exit HF compression driver with a 1.4” (35mm) polyimide diaphragm. The rotatable 90° x 50° HF horn has equal horizontal and vertical mouth dimensions for directivity control in both planes.

With a maximum SPL of 124dB @ 1m, it is uniquely placed to meet the foreground requirements of music bars and clubs that require upfront sound levels from a very compact enclosure. Use with a BlacklineX Series subwoofer will enable the X10 to operate as small dancefloor or sound reinforcement system that is remarkably powerful for its size, as well as being extremely portable.

The X10 is constructed from birch/poplar plywood and fitted with a screw-free steel grille, M8 inserts for a wall bracket and eyebolt suspension, plus a pole-mount socket.

The X10 may be used with or without a system controller. For demanding applications, Martin Audio recommends a DX0.4 or DX0.6 system controller configured to perform EQ and limiter functions. The DX0.4 or DX0.6 may also be used to configure systems for additional sub-bass cabinets such as X115 or SX210.

X12

The X12 fulfils the requirement for a compact system that can deliver high sound levels — either as a stand-alone system or supplemented by a BlacklineX subwoofer. Featuring a 12” (300mm) LF driver unit and a 1” (25mm) exit compression driver on a rotatable horn, its 80° x 50° dispersion pattern is ideal for medium throw applications. The LF driver has a 2.5” (65mm) voice coil and a high BL motor, while the HF compression driver utilises a 1.75” (44mm) polyimide diaphragm for extended high frequency response.

The X12’s enclosure is constructed from birch/poplar plywood and coated in black textured paint. For easy removal, its steel grille is a spring-fit into the sides of the enclosure. It is fitted with M8 inserts for a wall bracket and eyebolt suspension, plus a pole-mount socket with a removable bung that maintains clean lines when the X12 is used in install applications.

The X12 may be used with or without a system controller. For demanding applications, Martin Audio recommends a DX0.4 or DX0.6 system controller configured to perform EQ and limiter functions. The DX0.4 or DX0.6 may also be used to configure systems for additional sub-bass cabinets such as the X115 or X118.

X15

The X15 is a very high-power, passive two-way system designed for professional portable applications and installations that demand the ultimate in sonic performance from a single enclosure. With an accurately defined 80° x 50° coverage pattern, it combines very high output capability with exceptional sonic performance and impact.

It features a powerful 15” (380mm)/3” (75mm) voice coil LF drive unit, and a 1” (25mm) exit HF compression driver with a 1.75” (44mm) polyimide diaphragm for extended high frequency response.

Its protective steel grille is a spring-fit into the sides of the enclosure for easy access to rotate the HF horn. The symmetrical, multi-angle enclosure is manufactured from birch/poplar ply and coated in textured black paint. It is fitted with M8 inserts for a wall bracket and eyebolt suspension, plus a pole-mount socket.

The X15 may be used with or without a system controller. For demanding applications, Martin Audio recommends a DX0.4 or DX0.6 system controller configured to perform EQ and limiter functions. The DX0.4 or DX0.6 may also be used to configure systems for additional sub-bass cabinets such as X115, X118 or X218.

Sub-bass systems

X115

The X115 is a very compact subwoofer designed to augment the low frequency performance of BlacklineX Series full-range systems. It comprises a long excursion 15” (380mm)/3” (75mm) voice coil driver in a bass reflex enclosure and can be used singly, stacked or flown via integral M10 inserts. Four large ports contribute to a reduction in air noise at high output levels.

The enclosure is constructed from birch/poplar ply with a textured paint finish and the driver is protected by an impact-resistant perforated steel grille which is pre-curved to resist damage. The X115 has a 35mm pole-mount fitting in the top surface that can be used to pole mount an X8, X10, or X12 above the enclosure, and two side handles for easy handling.

The X115 is designed for use in a two-way active bi-amp system. A DX0.4 or DX0.6 system controller is the ideal system controller to provide the active crossover function and enhanced control facilities.

X118

The Blackline X118 is a compact, high-performance subwoofer for use with BlacklineX Series full-range loudspeakers. It extends the low frequency operating range of the combined system to 42Hz and provides exceptional low frequency impact. It can be used singly, stacked or flown via integral M10 insets and features a long-excursion 18” (460mm) with 4” (100 mm) voice coil driver in a compact reflex enclosure. Its four reflex ports have a large frontal area to reduce turbulent air noise at very high levels.

The X118 enclosure is constructed from plywood and finished in black textured paint. A perforated steel grille protects the driver, and the enclosure has a 35mm pole-mount fitting in the top surface and two side handles for ease of handling.

When used with BlacklineX Series full-range systems, crossover and EQ functions can be performed by the DX0.4 or DX0.6 system controller or by an iKON amplifier.

X218

The Blackline X218 is a dual-driver, high performance subwoofer for use with BlacklineX Series full-range loudspeakers. With an operating range of 42Hz-200Hz + 3dB, it produces high output levels with low distortion and can be used singly or stacked horizontally. It features dual 18” (460mm)/4” (100mm) voice coil, long-excursion drivers in a reflex enclosure with eight large ports that reduce air turbulence at high output levels.

The X218 is designed for use in a two-way active bi-amp system. A DX0.4 or DX0.6 system controller is the ideal system controller to provide the active crossover function and enhanced control facilities.

Accessories

A comprehensive range of accessories is available for the BlacklineX range for both portable and installation use.

Wall Brackets

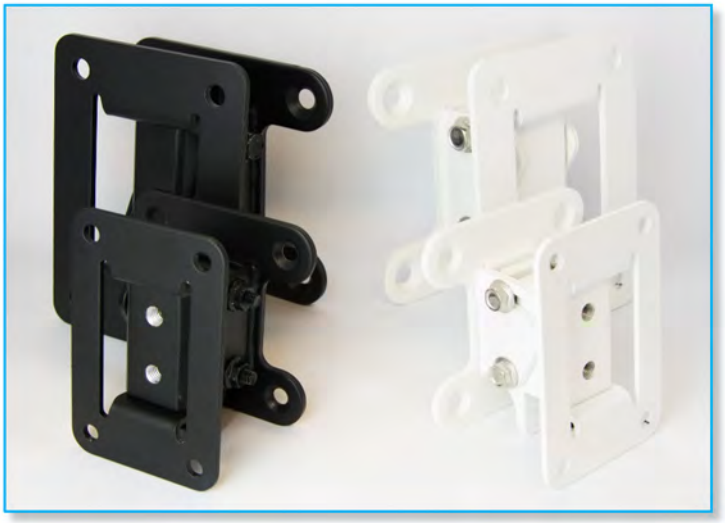

The BlacklineX range shares the mounting configuration of the CDD installation range so the same wall brackets can be employed. These are a two-part bracket enabling the wall section to be fitted at first fix stage when cables are run. The cabinet half can be fitted to the speaker in advance of arriving at site so that final installation is just a case of joining the two halves of the bracket and adjusting the position for the coverage required and connecting the cable.

The brackets for each model are as follows:

Blackline X8	**WB6/8 available in black (WB6/8B), white (WB6/8W) or RAL colours (WB6/8RAL)**
Blackline X10	**WB10/12 available in black (WB10/12B), white (WB10/12W) or RAL colours (WB10/12RAL)**
Blackline X12	**WB10/12 available in black (WB10/12B), white (WB10/12W) or RAL colours (WB10/12RAL)**
Blackline X15	**WB15 available in black (WB15B), white (WB15W) or RAL colours (WB15RAL)**

Eye Bolts

All BlacklineX speakers have threaded inserts available for flown applications in fixed installations. All full-range cabinets have M8 inserts, all sub woofers have M10 inserts. The inserts can be used for fitting bespoke flying hardware or for flying using Eye Bolts. These must be forged steel shouldered types certified with a safe working load in excess of the cabinet weight. Do not use cheap formed-steel types commonly available from DIY stores, as they are unsafe for flying heavy speaker cabinets. Correctly-rated shouldered eye bolts are available from Martin Audio as an optional accessory; the part numbers are as follows:

M8 (Blackline X8, 10, 12, 15)	**HTKCT05**
M10 (Blackline X115, 118, 218)	**HTKCT06**

Pole Mount

BlacklineX Series speakers have integral pole mount "top hat" fittings. These are fitted to the base of all full-range speakers (X8, 10, 12 and 15) and on the top of the BlacklineX subwoofers X115, 118 and X218. The fittings all use the standard 35mm diameter so they can be used with any regular speaker stand or accessory. The fitting in the subs allows use of a mounting pole to elevate one of the full-range cabinets on top of the sub without the need for bulky and unsightly tripod stands. Distance poles are also widely available but Martin Audio make a pole specifically for use with the Blackline range. The part number is an HTKCT04. This will support any of the full-range cabinets at the optimum height above an X115, X118 or X218.

Safety first

It is important that loudspeaker systems are used in a safe manner. Please take some time to review the following points concerning safe use of Blackline Series loudspeakers.

Professional loudspeakers are capable of producing extremely high sound levels and should be used with care. Hearing loss is cumulative and can result from levels above 90dB if people are exposed for a long period. Never stand close to loudspeakers driven at high level.

Pole or stand mounting

BlacklineX full-range loudspeakers incorporate pole mounting ("top hat") sockets so that they may be pole or stand mounted. **When using poles or stands, the following precautions are advised:**

- Ensure that the stand will support the weight of the speaker by checking the stand manufacturers rating. (See the Section 10 – Technical Specifications - for individual BlacklineX weights and dimensions)
- Make sure that the stand is placed on a level surface and that its legs are fully extended
- Do not place more than one speaker on each stand
- Run cables so that they do not present a trip hazard which could pull the speaker over
- When used outdoors in the wind, it may be necessary to add some weight to the base of the stand
- When using a pole mount with a sub-bass system, observe similar precautions.

Stacking

- Ensure that the floor or stage is level and solid
- Do not stack speakers too high outdoors where winds could topple the stack
- Be aware that speakers producing very high power levels can move or creep. To avoid this, place friction material between the floor and speaker and between each speaker or use strapping to secure the stack.

Rigging and suspension

WARNING: Suspending the system should only be done by qualified personnel following safe rigging practices. Secure fixings to the building structure are vital. Seek help from architects, structural engineers or other specialists if in any doubt.

BlacklineX Series enclosures are designed for portable applications but can be suspended singly by means of the threaded inserts provided. Enclosures are fitted internally with steel corner reinforcement brackets, where necessary, to ensure that each cabinet is strong enough to be hung from its top.

- Never suspend one enclosure from another to form an array or cluster using these fittings
- The common practice of using commercially available eye bolts for suspension should only be undertaken with great caution. Only forged shoulder eye bolts should be considered and it is important that the thread length is at least 30mm
- Formed eye bolts i.e. those which are formed from a steel rod bent into an eye are ***not*** recommended
- Eye bolts are strongest along the thread axis. Angling the enclosure will result in an angle pull and it is important to use eye bolts that are safe in these circumstances.
- Check that the eye bolt has a safe working load that is greater than the weight of the BlacklineX cabinet.

Amplification

Choosing a power amplifier

Martin Audio loudspeakers are capable of recreating musical dynamics accurately and with incredible impact if powered correctly. Martin Audio loudspeaker power ratings are quoted for AES power - a long-term average power rating with a much closer relation to a music signal than other measurement standards such as RMS, and Peak power – a short-term burst capability.

Moving coil loudspeakers can be run up to their AES power rating continuously and up to the higher Peak power rating for transient musical peaks. All BlacklineX Series speakers have a peak power rating four times the long-term AES rating. Ideally you should use an amplifier that can deliver the full peak rating without risk of clipping. This however may be beyond the budget for many so a good compromise is to aim for an amplifier that can deliver at least twice the AES rating.

This is particularly the case for the amplifier driving an X8, 10, 12 or 15 when they are used in conjunction with an 115, 118 or X218 as the sub cabinet will be delivering the majority of the energy in the program material. Do not however scrimp on the amplifier driving the subwoofer.

This should be acceptable for many applications but be aware of the limitations particularly if the system is used with uncompressed live music. In particular it is vital to avoid amplifier clipping, this is possibly the biggest single cause of damage to speaker drivers. The clipped waveform has a colossal harmonic output at ultra-high frequencies all being delivered at the full power capability of the amplifier so speaker damage is extremely likely.

The amplifier selection table below will assist in choosing an amplifier to suit your application at an acceptable price point.

Gain Settings

The vast majority of professional and even budget amplifiers on the market these days have a standard front to back gain regardless of their output power capability. The industry standard gain figure is 32dB which is a gain of X40. This figure is a good balance between enough gain to run the majority of systems without having to drive mixers and any other processing equipment at a level so high that there is a risk of clipping, and not too much gain which would raise the noise floor of the system. When using a DX0.4, DX0.6 or other system processor that has a limiter function you should always use the limiter settings shown in the parameter chart (see the chapter on the DX0.4 and DX0.6 Speaker Processor). The limiter threshold is calculated to allow the maximum level from your system without damage and is based on a known amplifier gain setting- 32dB by default. For that reason it is vital that if the amplifier has front panel gain controls they MUST be set FULL UP. Lowering them does not offer more protection for your system, it just changes the gain setting of the amplifier so a greater input level is required to obtain the maximum power from the amp. This will make the limiter in the system controller useless as the gain is no longer at the setting for which the threshold has been calculated. For optimum performance *always* observe the following; -

- **Use a DX0.4 or DX0.6 system processor and install the BlacklineX presets**
- **Or use another high quality system processor along with the published parameters for the BlacklineX range**
- **Use an amplifier with a gain of 32dB (X40)**
- **Always run front panel gain controls full up**
- **Avoid amplifiers that only quote a sensitivity rating; "xxdB for maximum output" (i.e. no published gain setting)**

Recommended Amplifiers

Model	AES Power Rating	Peak Power Rating	Ideal amplifier rating		Minimum rating		Martin Audio amplifiers
			4Ω	8Ω	4Ω	8Ω	
X8	200W	800W	1,600W	800W	800W	400W	VIA2502, VIA2004
X10	250W	1,000W	2,000W	1,000W	1,000W	500W	VIA2502, VIA2004
X12	300W	1,200W	2,400W	1,200W	1,200W	600W	VIA2502, VIA5002, VIA5004
X15	400W	1,600W	3,200W	1,600W	1,600W	800W	VIA5002, VIA5004
X115	500W	2,000W	4,000W	2,000W	2,000W	1,000W	VIA5002,VIA5004
X118	500W	2,000W	4,000W	2,000W	2,000W	1,000W	VIA5002, iK42, iK81
X218	1,600W	6,400W	6,400W	3,200W	3,200W	1,600W	VIA5002, iK42, iK81

Connections

The full-range loudspeakers X8, X10, X12, X15 and the X218 subwoofer have two Neutrik Speakon NL4 connectors wired in parallel. The input connector has pins 1+/- connected to the driver:

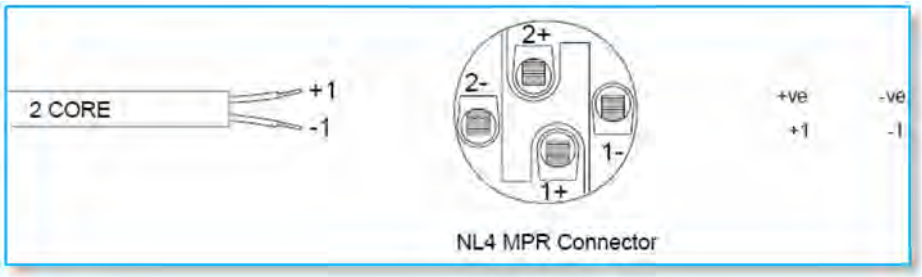

The LINK connector has pins 1+/- connected to INPUT pins 1+/- and pins 2+/- connected to INPUT pins 2+/-. This mean that you can use a short link lead to power another BlacklineX loudspeaker in parallel.

Connections for the X115 and X118

The X115 and X118 subwoofers (but not the X218) include an additional NL4 connector labelled LINK-B. You can use this connector to feed a full-range cabinet when running a bi-amped system with a DX0.4 or DX0.6 acting as a 2-way crossover and independent amplifiers for the sub and full-range cabinets. This is the rear panel of the X115 and X118:

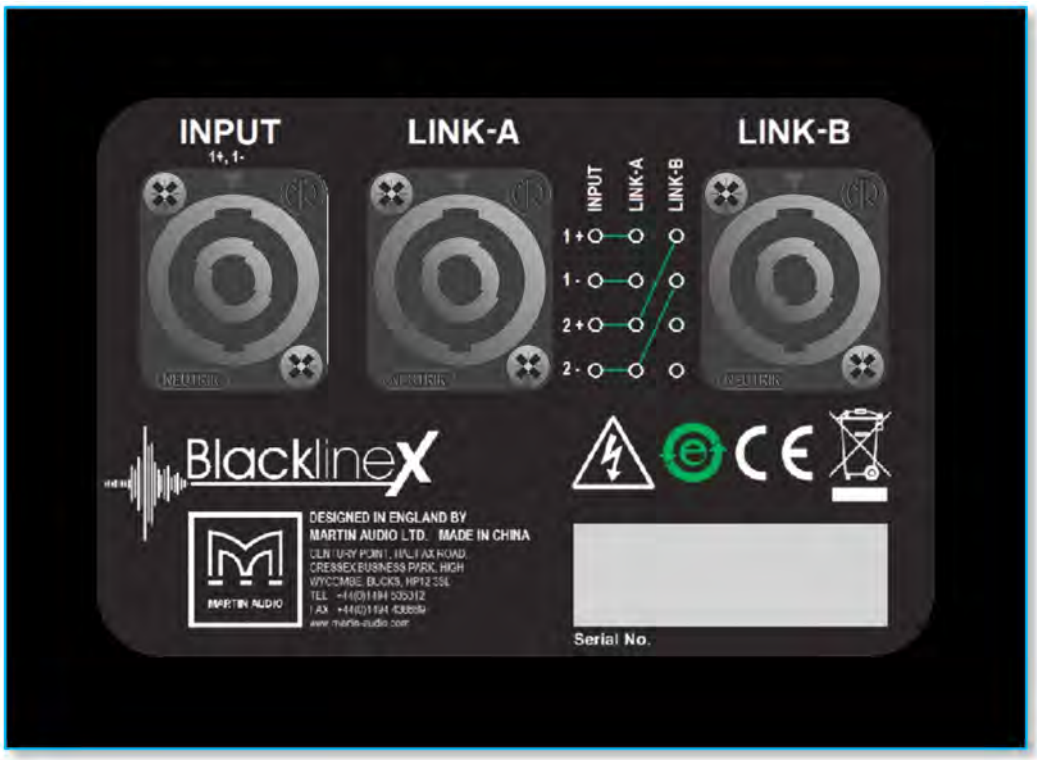

The INPUT and LINK-A NL4 connectors are wired in parallel, with pins 1+/– feeding the subwoofer driver. On the LINK-A connector, pins 1+/– are connected to INPUT pins 1+/–, and pins 2+/– are connected to INPUT pins 2+/–. The LINK-B connector has pins 1+/– connected to INPUT pins 2+/–. This wiring allows a bi-amp signal to be carried on a single 4-core speaker cable, with the sub feed on the cores connected to pins 1+/– and the mid-top feed on the cores connected to pins 2+/–. You plug this cable into INPUT. A standard NL4 cable then connects from LINK-B to your BlacklineX full-range loudspeaker (X8, X10, X12 or X15). The system operates in full bi-amp mode with very neat and tidy cabling.

This diagram shows how the connectors are wired internally in the X115 and X118 (X218 just has INPUT and LINK-A):

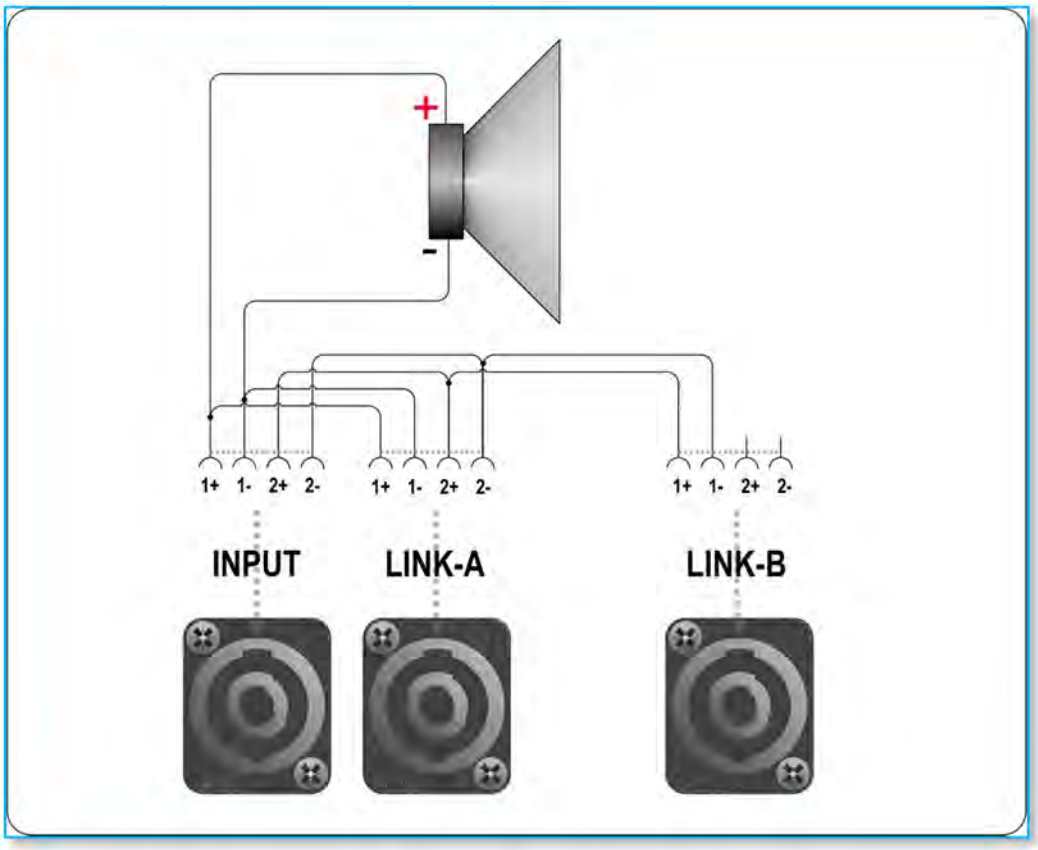

This shows how a bi-amped system would be wired (single channel only shown for clarity):

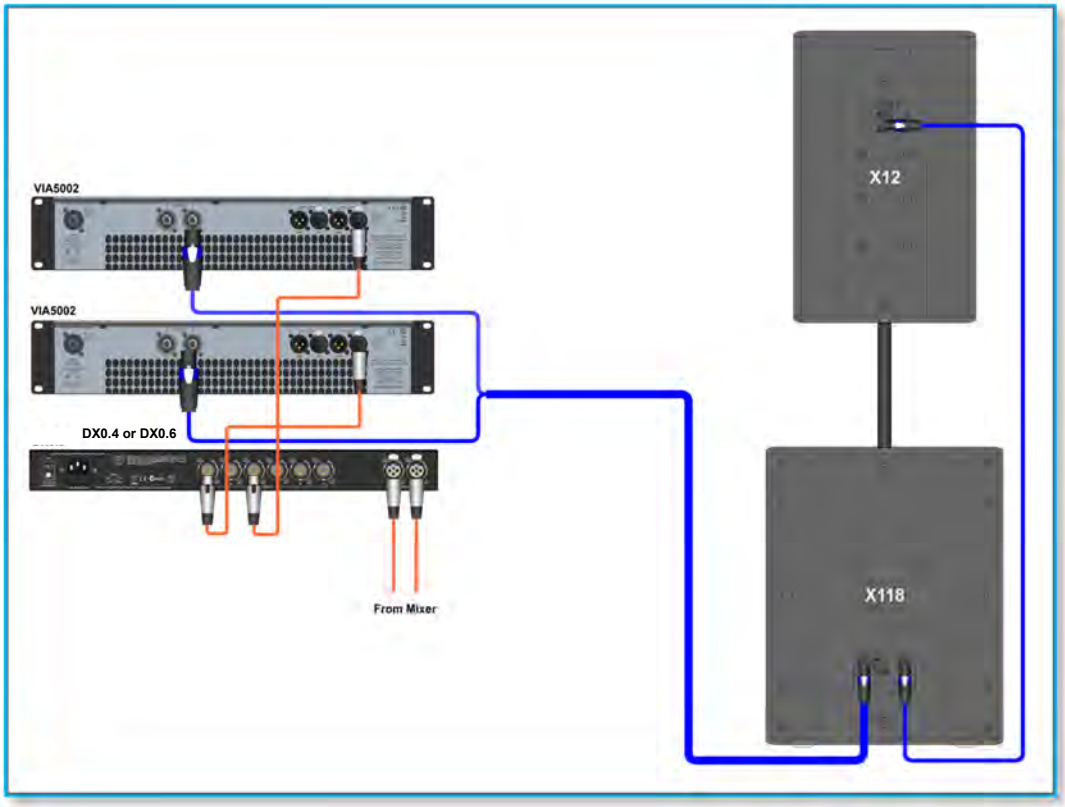

A DX0.4 or DX0.6 is used to provide the crossover function, output 1 is connected to channel A on a VIA5002 amplifier to drive the X118, channel 3 is connected to channel 1 on a second VIA5002 to drive the X12s. The outputs from the amplifiers are combined into a single 4-core cable with the Sub VIA5002 feeding pins 1+/- and the second VIA5002 feeding pins 2+/- (note that at the amplifier connection both Speakon connectors connect to pins 1+/-).

The 4-core cable is connected to the **Input** on the X118, **Link-A** is available to connect to a second sub for shows requiring very high levels of sub frequencies.

The **Link-B** output uses a standard Speakon NL4 to connect the X118 up to the X12 ensuring that the X12 gets its signal from the correct amplifier.

The diagram shows a custom cable that splits the 4-core cable at the amplifier end to route the two feeds into a single cable. Alternatively, you can use a patch panel fitted with NL4 connectors wired with independent connections from both amplifiers to pins 1+/– and 2+/–. This lets you use standard 4-core Speakon cables and creates a neat set of connections at the patch panel at the front of the rack, with no need to access the back of the amplifiers.

Wiring Diagrams

There are several ways that BlacklineX systems can be configured so we will now look at some practical wiring examples for the most common system configurations. We have shown a limited range of speaker types but the same wiring can be used for other models which will be listed with an indication of the correct DX0.4 or DX0.6 BlacklineX Preset to select

System A- basic set-up

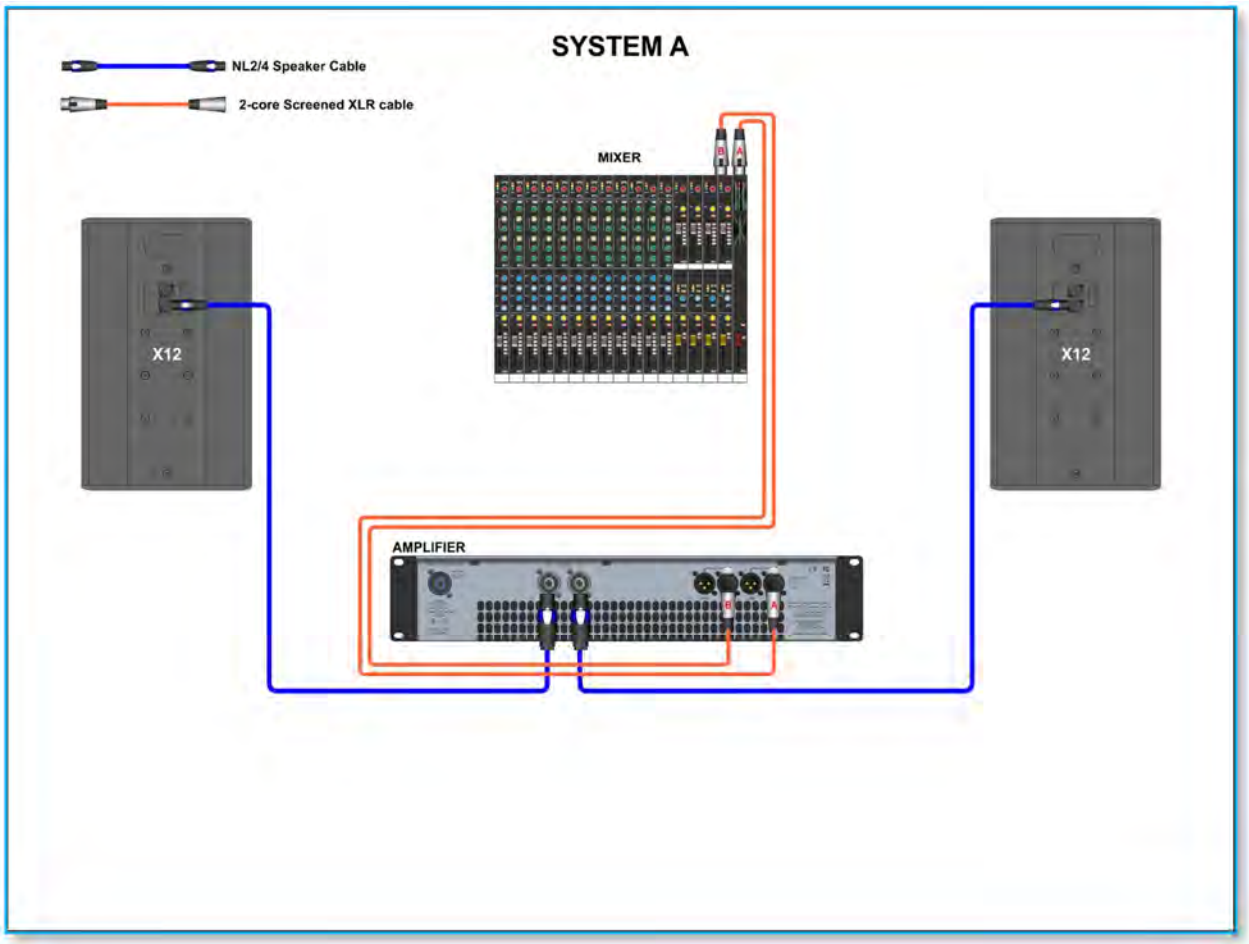

Products that could be used with this wiring:

Blackline X8
Blackline X10
Blackline X12
Blackline X15

This is the simplest system set up. Connect your source, often a mixer, straight to the amplifier using balanced XLR microphone cables. Then use Neutrik NL2 or NL4 Speakon cables from the amplifier outputs to the BlacklineX speaker inputs.

See the chapter on amplifier selection to choose the most appropriate amplifier for use with the BlacklineX cabinet. Note that as there is no system processing you will need to run the system carefully to avoid over-driving and potentially damaging the speaker. Listen for any distortion at high volume or the amplifier level indicators showing clipping and reduce the level from the mixer immediately.

System B- Introducing a Processor

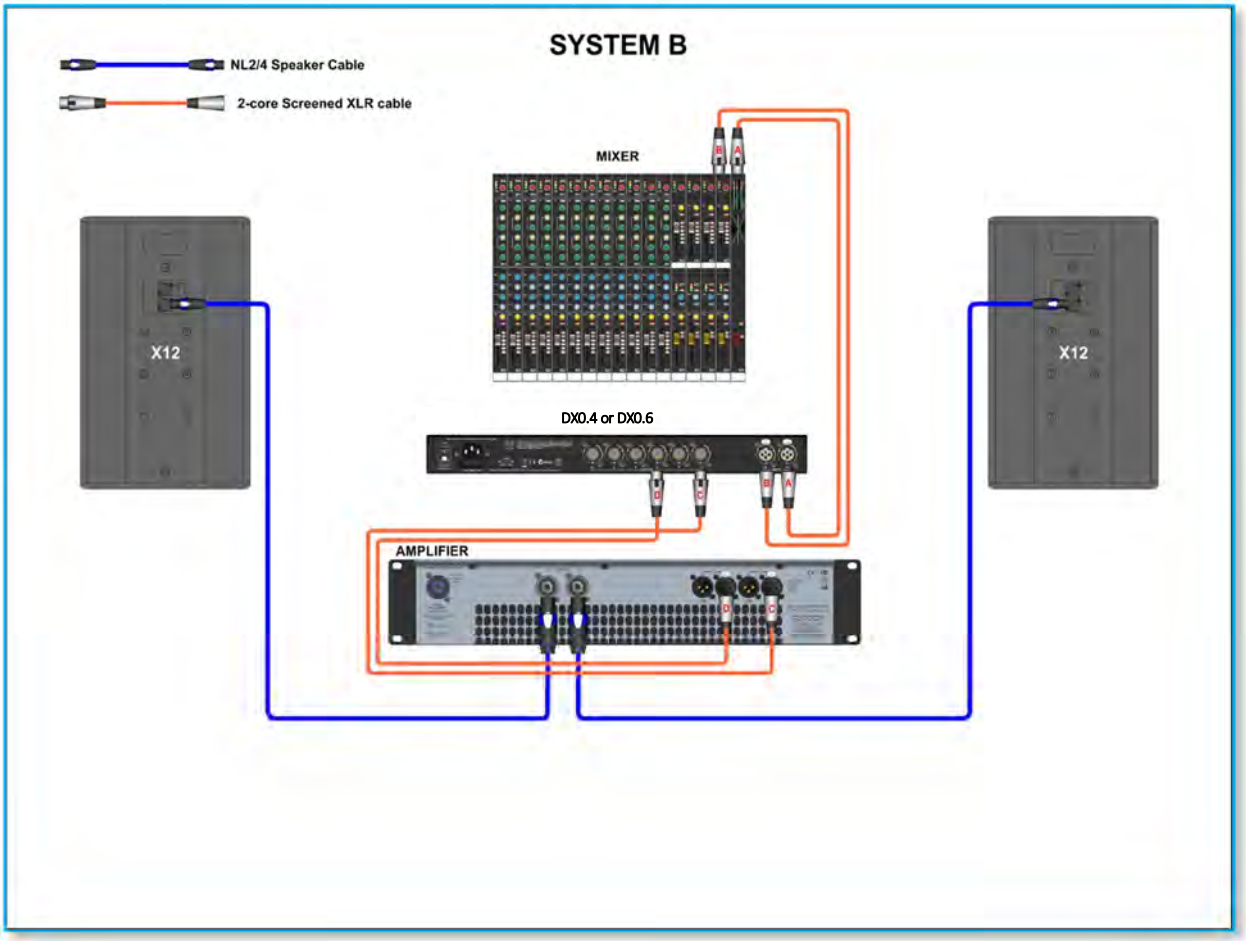

Products that could be used with this wiring:

Blackline X8 with DX0.4 or DX0.6
Blackline X10 with DX0.4 or DX0.6
Blackline X12 with DX0.4 or DX0.6
Blackline X15 with DX0.4 or DX0.6

This system adds a digital processor in the signal chain between the mixer and amplifier for optimum performance from your BlacklineX system. The Martin Audio DX0.4 or DX0.6 is the best option and you can install presets for the BlacklineX range. Alternatively, you could use a DX4.0. If you use a third party processor, the parameters are available in spreadsheet form on the Loudspeaker Settings page on the Martin Audio website.

As well as applying the recommended equalisation, the processor adds a limiter in the final stage of processing to protect the system from being damaged by being over-driven.

The XLR feeds from the mixer go to the inputs of the DX0.4 or DX0.6. The DX0.4 or DX0.6 outputs shown should be connected to the amplifier inputs with another short pair of XLR cables. Two Speakon NL2 or NL4 speaker cables connect the amplifier outputs to the speakers.

You will also need to choose the best match of amplifier for the speakers. See the chapter on amplifier selection.

System C - Adding a Mono Sub

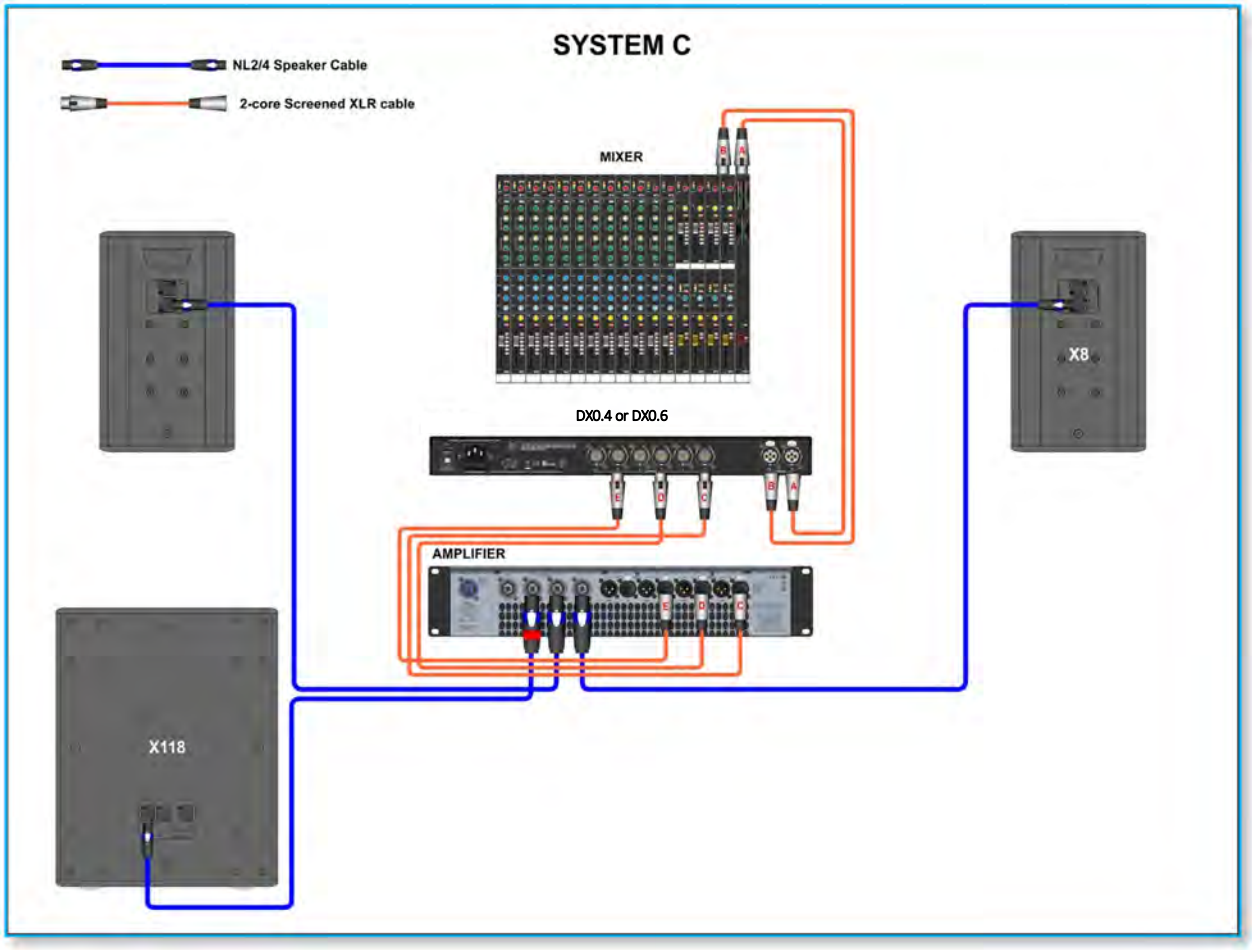

Products that may be used with this wiring; -

Blackline X8 plus X115 with DX0.4 or DX0.6
Blackline X8 plus X118 with DX0.4 or DX0.6
Blackline X8 plus X218 with DX0.4 or DX0.6

Blackline X10 plus X115 with DX0.4 or DX0.6
Blackline X10 plus X118 with DX0.4 or DX0.6
Blackline X10 plus X218 with DX0.4 or DX0.6

Blackline X12 plus X115 with DX0.4 or DX0.6
Blackline X12 plus X118 with DX0.4 or DX0.6
Blackline X12 plus X218 with DX0.4 or DX0.6

Blackline X15 plus X115 with DX0.4 or DX0.6
Blackline X15 plus X118 with DX0.4 or DX0.6
Blackline X15 plus X218 with DX0.4 or DX0.6

This system adds a single subwoofer and uses the Martin Audio VIA5004 four channel amplifier for a neat solution avoiding having to add a second amplifier. Channels 1 and 2 drive the two full-range cabinets and channel 3 & 4 are used in bridge mode. As with the previous system, there are left and right connections from the mixer to the input of the DX0.6. Output Channels 1 and 3 on the DX0.6 connect to inputs 1 and 2 on the amplifier using a pair of short XLR cables. A final XLR cable is connected from output channel 5 on the DX0.6 to input 3 on the amplifier. The bridge switch for channels 3 & 4 on the rear panel must be depressed.

Speakon NL2 or NL4 cables go from the amplifier output channels 1 & 2 to the left and right full-range speakers, and a Speakon NL4 speaker cable goes from amplifier output 3 to the Subwoofer. Note that the wiring in the NL4 connecter at the amplifier must be on pins 1+/2+ for bridge mode operation. See the User Guides for the VIA5004 for details of bridge mode operation.

System D - Adding Subwoofers with a second amplifier

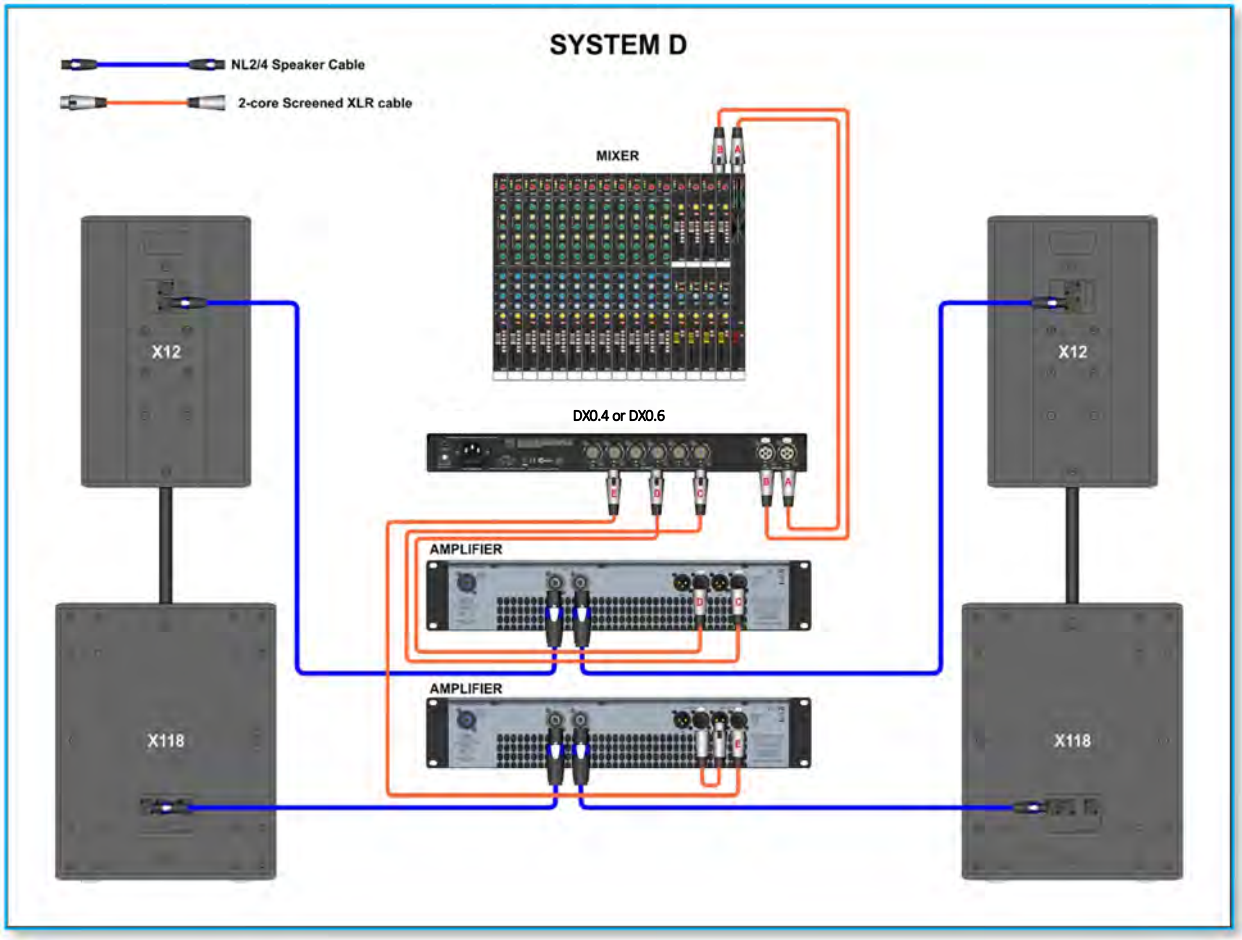

Products that could be used with this wiring:

Blackline X8 plus X115 with DX0.4 or DX0.6
Blackline X8 plus X118 with DX0.4 or DX0.6
Blackline X8 plus X218 with DX0.4 or DX0.6

Blackline X10 plus X115 with DX0.4 or DX0.6
Blackline X10 plus X118 with DX0.4 or DX0.6
Blackline X10 plus X218 with DX0.4 or DX0.6

Blackline X12 plus X115 with DX0.4 or DX0.6
Blackline X12 plus X118 with DX0.4 or DX0.6
Blackline X12 plus X218 with DX0.4 or DX0.6

Blackline X15 plus X115 with DX0.4 or DX0.6
Blackline X15 plus X118 with DX0.4 or DX0.6
Blackline X15 plus X218 with DX0.4 or DX0.6

This system adds a pair of subwoofers which are run in mono using a second amplifier. This configuration allows the use of a dedicated high-power amplifier for the subs to deliver the maximum output capability.

There are left and right connections from the mixer to the input of the DX0.6. Output Channels 1 and 3 on the DX0.6 connect to inputs 1 and 2 on the amplifier for the full-range cabinet using a pair of short XLR cables. An XLR cable is connected from output channel 5 on the DX0.6 to input 1 on the subwoofer amplifier. A final short XLR links channels 1 & 2

Speakon NL2 or NL4 cables go from the first amplifier output channels 1 & 2 to the left and right full-range speakers, and Speakon NL2 or NL4 speaker cables go from the subwoofer amplifier outputs 1 & 2 to the Subwoofer inputs.

You will also need to choose the best match of amplifier for the speakers. See the chapter on amplifier selection.

System E - Stereo Subwoofers

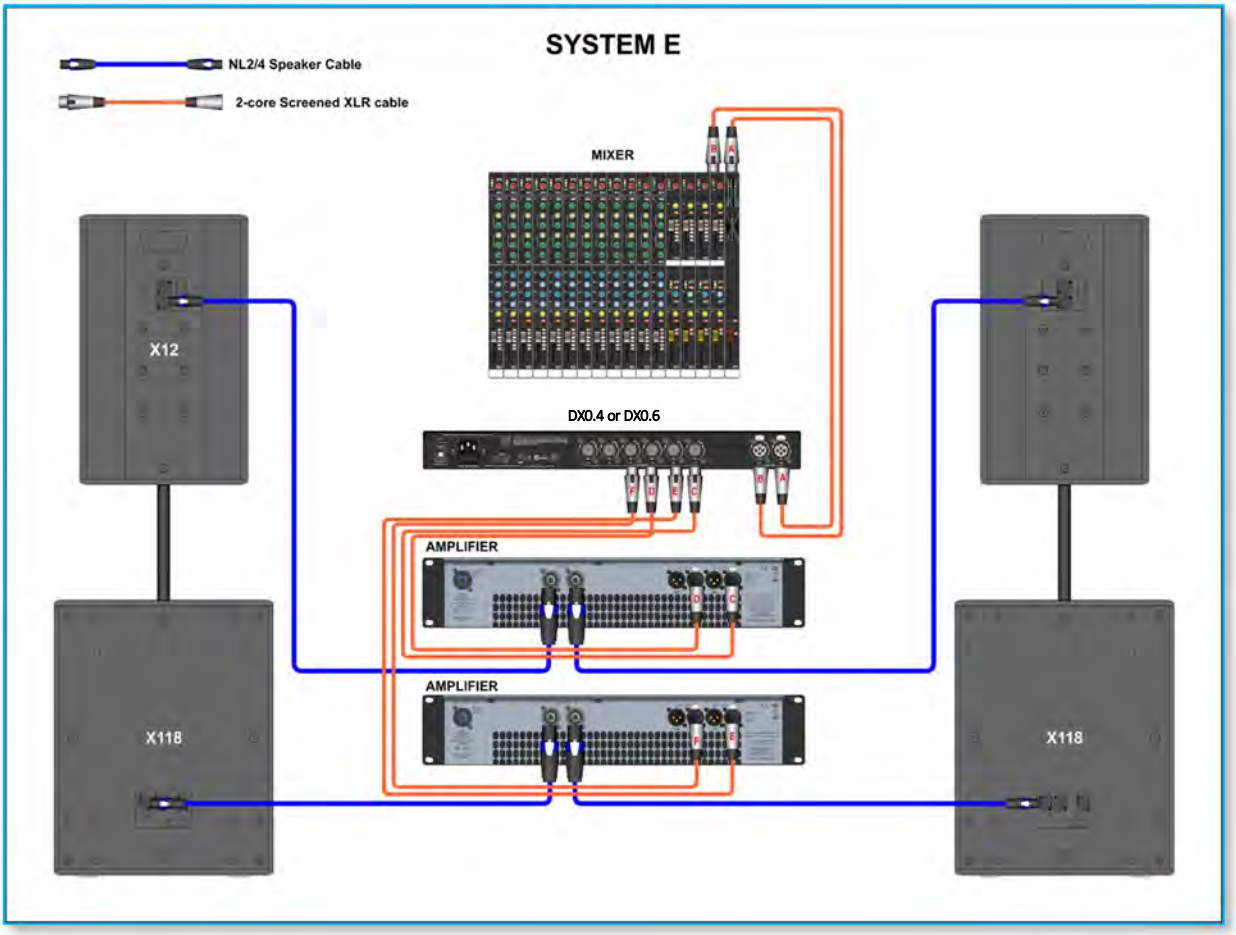

Products that could be used with this wiring:

Blackline X8 plus X115 with DX0.4 or DX0.6
Blackline X8 plus X118 with DX0.4 or DX0.6
Blackline X8 plus X218 with DX0.4 or DX0.6

Blackline X10 plus X115 with DX0.4 or DX0.6
Blackline X10 plus X118 with DX0.4 or DX0.6
Blackline X10 plus X218 with DX0.4 or DX0.6

Blackline X12 plus X115 with DX0.4 or DX0.6
Blackline X12 plus X118 with DX0.4 or DX0.6
Blackline X12 plus X218 with DX0.4 or DX0.6

Blackline X15 plus X115 with DX0.4 or DX0.6
Blackline X15 plus X118 with DX0.4 or DX0.6
Blackline X15 plus X218 with DX0.4 or DX0.6

It is common to run subwoofers in mono as most low frequencies have very little stereo content, however in some circumstances you may wish to run subwoofers in stereo using this system. The configuration uses two amplifiers allowing a good match of amplifier to the power capability of the speakers and in particular using a higher power amplifier for the subs to deliver the maximum output capability.

There are left and right connections from the mixer to the input of the DX0.4 or DX0.6. Output Channels 1 and 3 on the DX0.4 or DX0.6 connect to inputs 1 and 2 on the amplifier for the full-range cabinet using a pair of short XLR cables. Another pair of XLR cables are connected from output channels 2 and 4 on the DX0.4 or DX0.6 to inputs 1 and 2 on the subwoofer amplifier.

Speakon NL2 or NL4 cables go from the first amplifier output channels 1 & 2 to the left and right full-range speakers, and from the subwoofer amplifier outputs 1 and 2 to the Subwoofer inputs.

You will also need to choose the best match of amplifier for the speakers. See the chapter on amplifier selection.

System F – Stereo Subwoofers using the bi-amp wiring facility

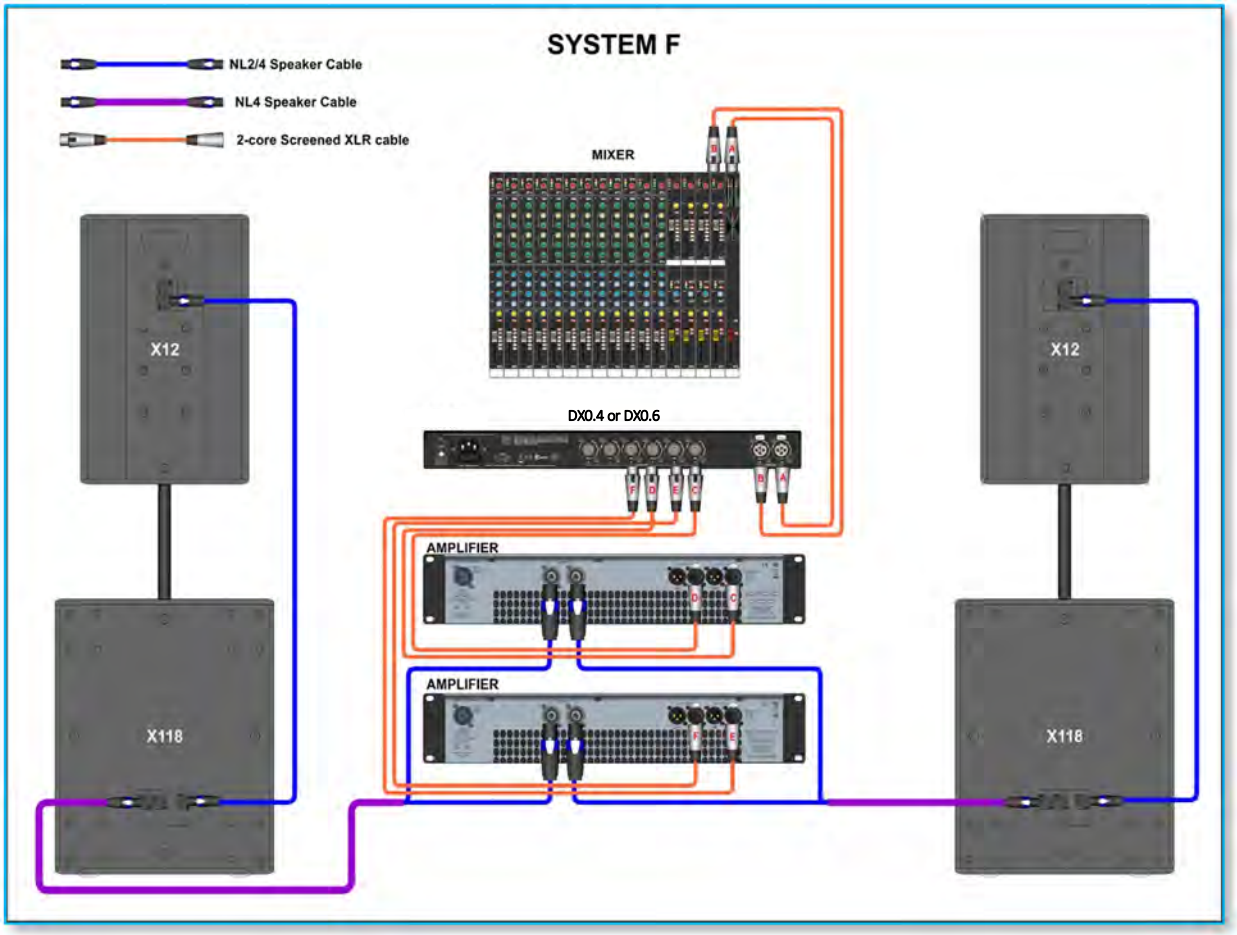

Products that could be used with this wiring:

Blackline X8 plus X115 with DX0.4 or DX0.6
Blackline X8 plus X118 with DX0.4 or DX0.6

Blackline X10 plus X115 with DX0.4 or DX0.6
Blackline X10 plus X118 with DX0.4 or DX0.6

Blackline X12 plus X115 with DX0.4 or DX0.6
Blackline X12 plus X118 with DX0.4 or DX0.6

Blackline X15 plus X115 with DX0.4 or DX0.6
Blackline X15 plus X118 with DX0.4 or DX0.6

This system is identical to System E but utilises the bi-amp output link B available on the Blackline X115 and X118 subwoofers. See the chapter on Connections for full details. This makes for a much neater system with a single cable running from the amplifier rack to each stack and a short cable linking the subwoofer to the full-range cabinet. All input connections from the DX0.4 or DX0.6 to the amplifiers are identical to System E.

The output uses a custom 4-core cable. At the rack end the 4-cores are split to two pairs each terminated in a Speakon NL2 or NL4. These connect to the amplifier outputs, one for the sub feed and one for the full-range cabinet feed. At the other end the cable is terminated in a Speakon NL4, pins 1+/- are fed from the subwoofer amplifier and 2+/- from the full-range cabinet amplifier. These connect to the Subwoofer inputs

A short Speakon NL2 or NL4 cable runs from the Link B connections on the subs up to the inputs on the full-range cabinets.

The system could be even neater with a custom patch panel in the amplifier rack with a cable from the subwoofer amplifier going to pins 1+/- on a panel mount NL4 socket with another cable from the full-range amplifier going to pins 2+/- on the same connector. That way a standard Speakon NL4 to NL4 speaker cable can be used to connect from the amp rack to the speaker stacks.

DX0.4 and DX0.6

Offering sophisticated EQ, crossover, dynamics processing and system protection, the Martin Audio DX0.4 and DX0.6 Loudspeaker Management Systems provide complete system optimization for both passive and powered systems.

For full details of these products, see the DX0.4 or DX0.6 User Guides in the products section of the Martin Audio website. Alternatively, you could select **Support > User Guides** from the Martin Audio website.

You can configure and control these processors using control software that you can freely download from the Martin Audio website. For full details, see the User Guide for this software in the **Support > Software** section of the Martin Audio website.

Grille Removal and horn Rotation

The BlacklineX full-range cabinets may be used in "landscape" or horizontal orientation, most obviously when used as a monitor wedge but also when flown in fixed installations. For the speaker to perform correctly it is necessary to rotate the horn flare through 90° to preserve the horizontal and vertical dispersion. The speakers are designed to make this as straightforward as possible with spring-loaded grilles which are easily removed and horns screwed in place with Pozidrive screws. It is also possible to rotate the Martin Audio badge on the grille.

Grille Removal

Grilles on BlacklineX cabinets are designed to be easy to remove to facilitate driver rotation. No screws are used to hold them in place; they are manufactured with a natural spring which holds them in place in slots in each side of the cabinets. The grilles have two or three gaps in the sides into which an appropriately sized flat-bladed screwdriver can be inserted to assist in removal.

Insert the screwdriver blade into one of the gaps - either at the top or bottom of the cabinet.

Gently push the handle down. This will ease the grille out of the slot, it may have bitten into the paint surface so you just need to make sure it is free to be lifted clear.

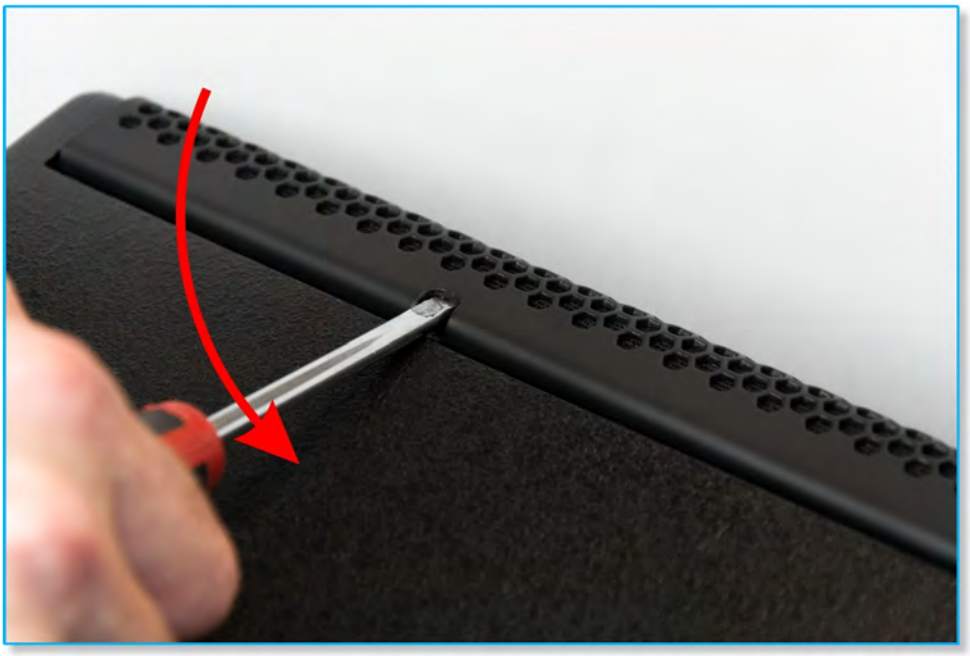

Now lift the handle up; this will ease the grille forward slightly to prevent the return on the grille dropping straight back into the slot:

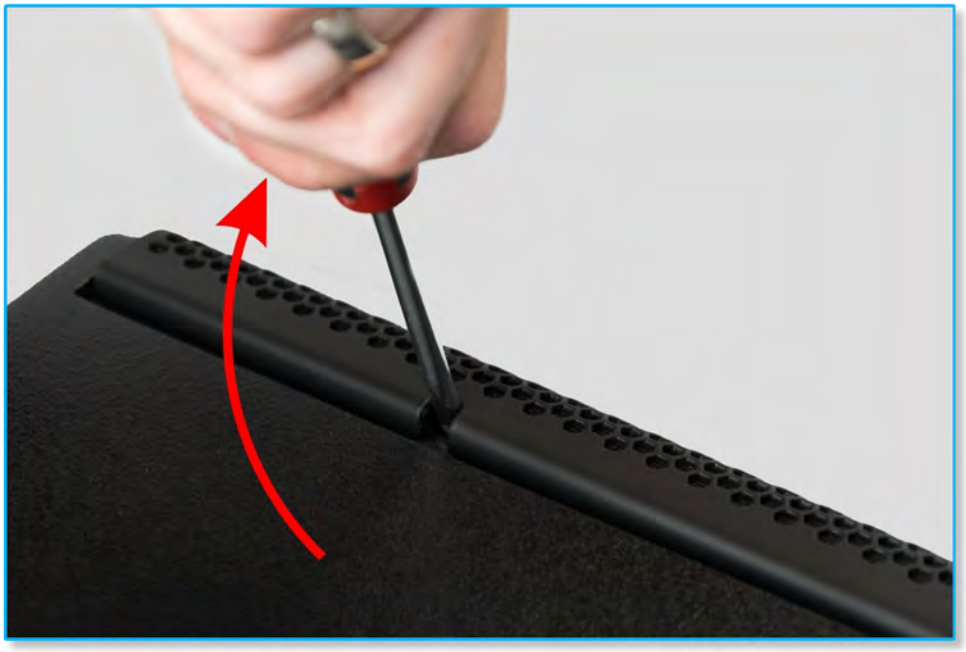

Repeat this process for the remaining gaps in the grille to ease it out of the slot all the way up one side of the cabinet; when you get to the final gap the grille should pop out and away from the front of the cabinet.

To replace the grille, first insert one side into the slot on one side of the cabinet. Make sure the return on the grille is completely engaged in the slot. Push on the front of the grille with the flat of your hand, which will encourage the other edge of the grille to locate on the side of the cabinet close to the slot. Now push the edge of the grille back starting at the top or the bottom to engage the return in the slot; you may need to do this a little at a time, working down the length of the grille until it pops into place.

Rotating the high frequency horn

The compression driver and horn assembly on all full-range models are held into the cabinet using eight Pozidrive No.2 screws. Once the grille is removed these are easily seen on the flange of the horn. All models are essentially identical with just a larger horn flare on the bigger cabinets.

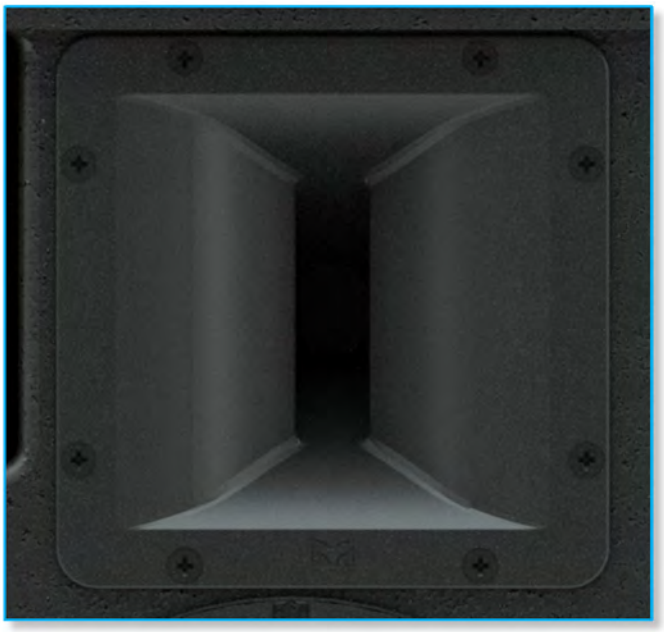

When using the cabinet in horizontal or "landscape" mode, unscrew all eight screws placing them somewhere where they won't get lost. Carefully lift the horn assembly forward. There is no need to lift it completely out of the cabinet, just enough to allow you to rotate it. Turn it through 90° in either direction, line up the holes in the flange with those in the cabinet and replace all eight screws. Be careful not to over-tighten and cross-thread the screws in the cabinet baffle. The baffle is wood so the screws do not need to be too tight.

Badge Rotation

When using speakers in landscape, rotate the Martin Audio badge. It is spring loaded and turns only in fixed 90° increments, making it easy to align.

The badge is easier to rotate if you remove the grille first. Push the spigot on the back of the grille so the badge lifts and sits proud of its recess. Rotate it as needed, then release the spigot so the badge drops back into place.

You can then replace the grille.

The badge is protected by a plastic film, which should stay in place until the cabinet is installed or ready for use. Once in position, peel off the film and discard it.

Wall Mounting

You can wall mount BlacklineX8, 10, 12 and 15 in portrait or landscape modes. The Blackline X8 uses part number WB6/8, Blackline X10 and X12 use WB10/12 and Blackline X15 uses WB15. These wall brackets are compatible with the CDD installation range.

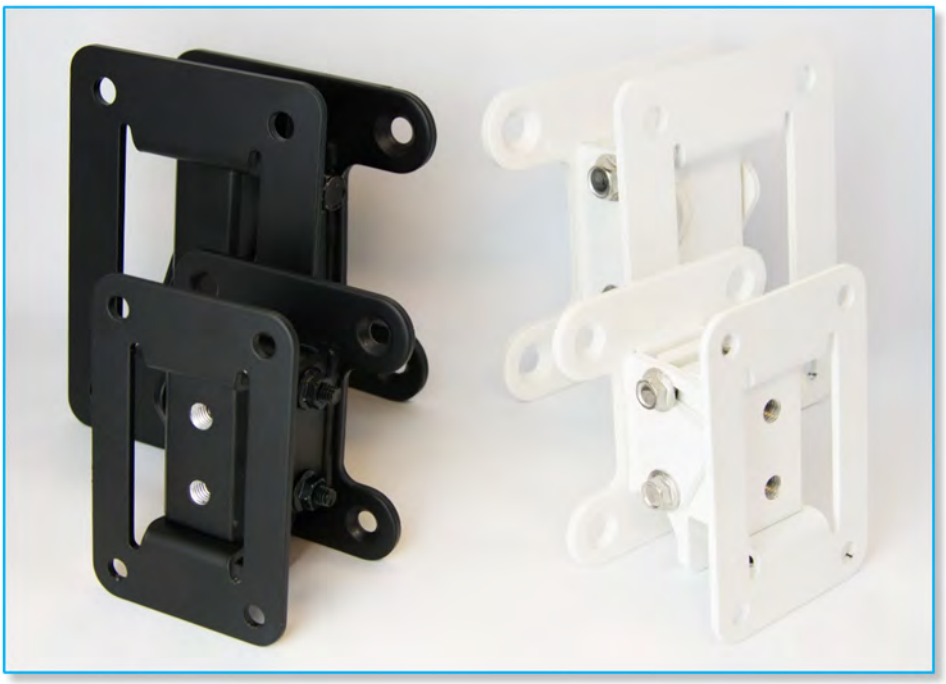

When using a BlacklineX cabinet in landscape mode, remember to rotate the horn and badge through 90°. For instructions, see the chapter on grille removal and horn rotation.

Installation is a two-part process in common with standard first and second fix procedures. The installation method for all sizes of brackets is identical.

The first step is to separate the two halves of the bracket. There are two horizontally mounted nut and bolts holding the two halves together. The upper one which sits in a curved slot does NOT need to be removed. Unscrew the lower bolt and the cabinet bracket will lift off the wall bracket

First fix is to secure the wall section of the bracket. This is the part with four mounting holes, a vertical bolt holding the section which allows horizontal adjustment and the slot into which the cabinet bracket bolt sits. Use appropriate wall fixings suitable for the composition of the wall. These must be of sufficient strength to support the weight of the speaker plus the bracket: 9 Kg for the X8, 15 Kg for the X10, 18 Kg for the X12 and 27 Kg for the X15.

Next step is to attach the cabinet section of the bracket to the Blackline. This is the bracket with four countersunk fixing holes on a square pattern with the horizontal bolt in the curved slot.

The rear of the cabinet has six countersunk bolts fitted designed for use with the mounting brackets. For portrait mode remove the lower 4 bolts, for landscape mode remove the middle four; -

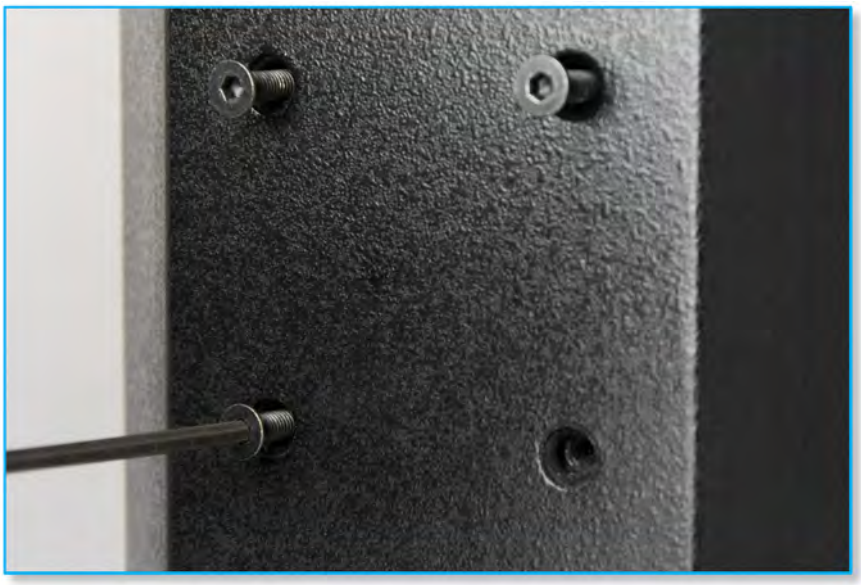

Position the bracket over the required holes orientated to suit the orientation that is being used and screw into place tightly using the bolts removed from the cabinet.

For horizontal (landscape) mode use the four holes closest to the middle and attach the bracket at right angles to the cabinet

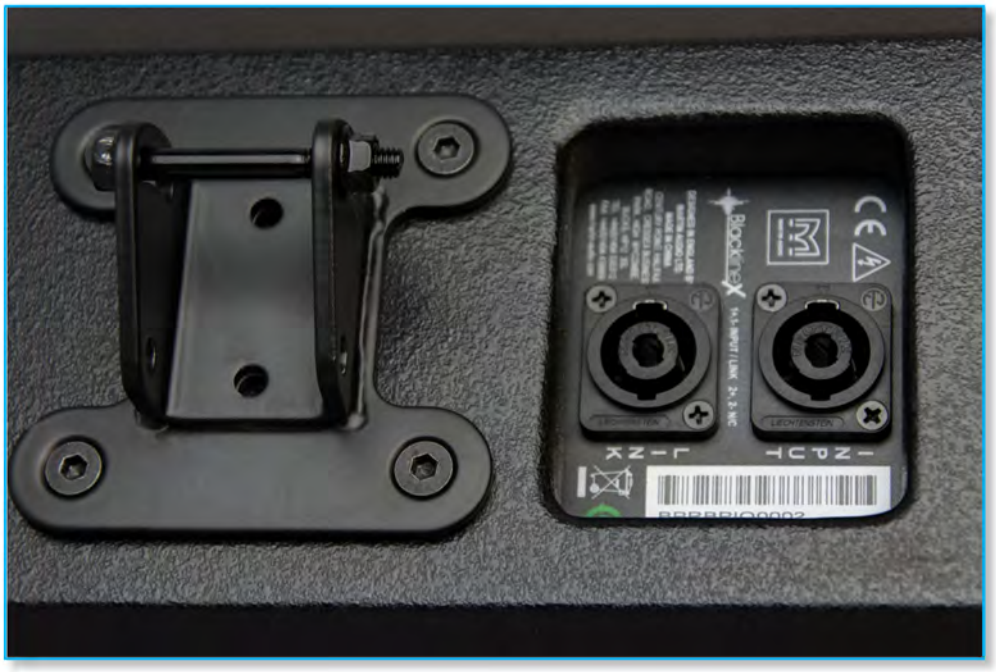

You are now ready to fit the speaker to the wall. Offer the speaker up to the bracket so you can hook the horizontal bolt in the notch of the wall bracket. Make sure that you follow appropriate safety measures if you are working at height such as using a scaffold tower or lifting platform. This would allow you to use both hands safely.

Once the bracket is hooked together and taking the weight of the cabinet you can replace the lower bolt.

Final adjustments can now be made. Horizontal (pan) adjustment is available by rotating assembly on the vertical bolt, when you're happy with the angle, the vertical securing bolt can be tightened with an M5 hex key (for X8 or X10) or M6 hex key (for X12 or X15) to lock the position.

Vertical (tilt) adjustment is made by adjusting the grub screw:

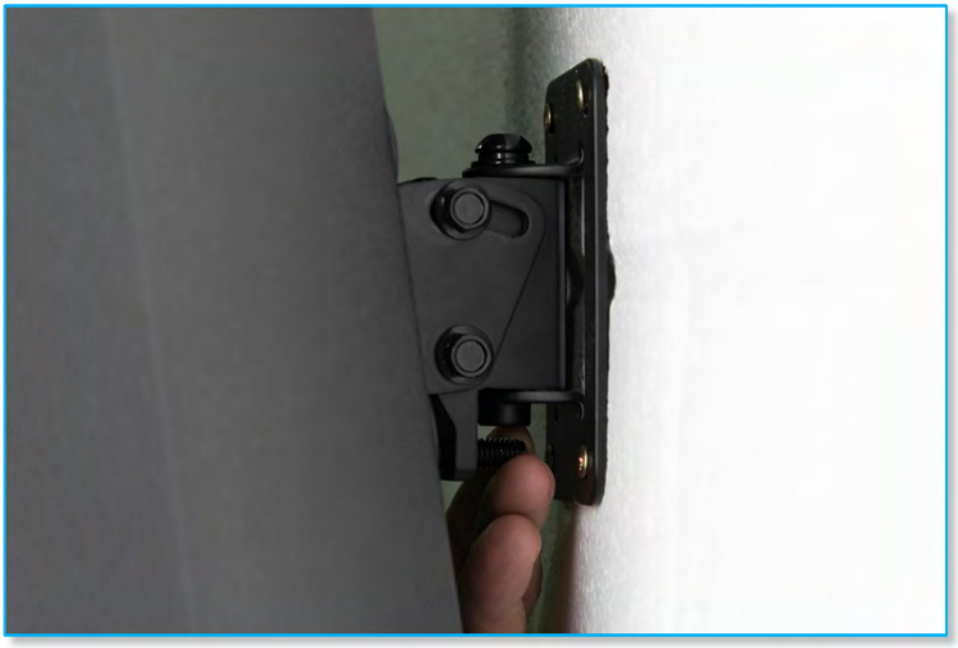

Once the vertical position is fixed the two horizontal bolts can be tightened, this is best achieved by using a socket set with an extender bar to reach the bolt heads.

Eye Bolt Mounting

All BlacklineX systems have threaded inserts rated for flown installations. All BlacklineX full-range enclosures have M8 threaded inserts and all BlacklineX Subs have M10 inserts. Most commonly these are used in conjunction with shouldered eye bolts for suspending the cabinets using appropriately rated chain or steel wire. Martin Audio's HTKCT05 (M8) and HTKCT06 (M10) are rated for use in flown applications. Note that if you plan to use alternative eye bolts these must be shouldered cast steel NOT formed steel types commonly available from DIY stores. They must have a safe working load rating compatible with the weight of the cabinets.

The BlacklineX can be flown in portrait or landscape format. When using the cabinet in landscape mode, you must rotate the horn. For details, see the chapter on grille removal and horn rotation.

We recommend using a minimum of four eye bolts with which to suspend the cabinet irrespective of which orientation is used. In most applications two eye bolts are used as the primary support left and right. A third attaches to the rear of the cabinet and is used to adjust the down-tilt of the cabinet as required. The fourth eye bolt is used to attach a secondary safety line which should be attached to a secure mounting point which is independent of the primary flying point- round a girder or similar.

Specifications

X8

TYPE	Ultra-compact, passive two-way system
FREQUENCY RESPONSE (5)	70Hz – 20kHz ±3dB, -10dB @ 50Hz
DRIVER	LF: 8” (200mm)/2” (50mm) voice coil, ferrite motor system
	HF: 1” (25mm) exit/1” (38mm) voice coil, polyimide dome compression driver
RATED POWER (2)	200W AES, 800W peak
RECOMMENDED AMPLIFIER	VIA2502 and VIA2004
SENSITIVITY (8)	92dB
MAXIMUM SPL (9)	115dB continuous, 121dB peak, 127dB peak with crest factor 4
NOMINAL IMPEDANCE	8 ohms
DISPERSION (-6dB)	90° H x 50° V (user-rotatable)
CROSSOVER	2.9kHz passive
ENCLOSURE	Multi-angle birch/poplar ply
FINISH	Black (RAL 9005) textured paint
PROTECTIVE GRILLE	Black perforated steel with scrim cloth backing
CONNECTORS	2 x NL4 type
PIN CONNECTIONS (INPUT)	1+/1-
PIN CONNECTIONS (LINK)	1+/- connected to INPUT 1+/- and 2+/- connected to INPUT 2+/-
FITTINGS	13 x M8, 6 x M6 inserts, pole-mount socket, 1 x pocket handle
DIMENSIONS	(W) 257mm x (H) 422mm x (D) 243mm
	(W) 10.1ins x (H) 16.6ins x (D) 9.6ins
WEIGHT	8kg (17.6lbs)
ACCESSORIES	Wall bracket, eyebolts

X10

TYPE	Compact, passive two-way system
FREQUENCY RESPONSE (5)	65Hz-20kHz ± 3dB, -10dB @ 55Hz
DRIVERS	LF: 10” (250mm)/2.5” (63.5mm) voice coil ferrite motor system
	HF: 1” (25mm) exit/1.4” (35mm) voice coil, polyimide dome compression driver
RATED POWER (2)	250W AES, 1000W peak
RECOMMENDED AMPLIFIER	VIA2502 and VIA2004
SENSITIVITY (8)	94dB
MAXIMUM SPL (9)	118dB continuous, 124dB peak , 130dB peak with crest factor 4
NOMINAL IMPEDANCE	8 ohms
DISPERSION (-6dB)	90° H x 50° V (user-rotatable)
CROSSOVER	2.4kHz passive
ENCLOSURE	Multi-angle birch/poplar ply
FINISH	Black (RAL 9005) textured paint
PROTECTIVE GRILLE	Black perforated steel with scrim cloth backing
CONNECTORS	2 x NL4 type
PIN CONNECTIONS (INPUT)	1+/1-
PIN CONNECTIONS (LINK)	1+/- connected to INPUT 1+/- and 2+/- connected to INPUT 2+/-
FITTINGS	19 x M8 inserts, pole-mount socket, 1 x bar handle
DIMENSIONS	(W) 324mm x (H) 522mm x (D) 289mm
	(W) 12.8ins x (H) 20.6ins x (D) 11.4ins
WEIGHT	14kg (30.9lbs)
ACCESSORIES	Wall bracket, eyebolts

X12

TYPE	Compact, passive two-way system
FREQUENCY RESPONSE (5)	62Hz-20kHz ± 3dB, -10dB @ 50Hz
DRIVERS	LF: 12” (300mm)/2.5” (63.5mm) voice coil, ferrite motor system
	HF: 1” (25mm) exit/1.7” (44mm) voice coil, polyimide dome compression driver
RATED POWER (2)	300W AES, 1200W peak
RECOMMENDED AMPLIFIER	VIA2502, VIA5002, VIA5004
SENSITIVITY (8)	97dB
MAXIMUM SPL (9)	122dB continuous, 128dB peak, 134dB peak with crest factor 4
NOMINAL IMPEDANCE	8 ohms
DISPERSION (-6dB)	80° H x 50° V (user-rotatable)
CROSSOVER	2.3kHz passive
ENCLOSURE	Multi-angle birch/poplar ply
FINISH	Black (RAL 9005) textured paint
PROTECTIVE GRILLE	Black perforated steel with scrim cloth backing
FITTINGS	Top hat for pole mounting
CONNECTORS	2 x NL4 type
PIN CONNECTIONS (INPUT)	1+/1-
PIN CONNECTIONS (LINK)	1+/- connected to INPUT 1+/- and 2+/- connected to INPUT 2+/-
FITTINGS	20 x M8 inserts, pole-mount socket, 1 x bar handle
DIMENSIONS	(W) 358mm x (H) 574mm x (D) 337mm
	(W) 14.1ins x (H) 22.6ins x (D) 13.7ins
WEIGHT	17kg (37.5lbs)
ACCESSORIES	Wall bracket, eyebolts

X15

TYPE	High-power, passive two-way system
FREQUENCY RESPONSE (5)	55Hz-20kHz ± 3dB, -10dB @ 45Hz
DRIVERS	LF: 15” (380mm)/3” (75mm) voice coil, ferrite motor system
	HF: 1” (25mm) exit/1.7” (44mm) voice coil, polyimide dome compression driver
RATED POWER (2)	400W AES, 1600W peak
RECOMMENDED AMPLIFIER	VIA5002 and VIA5004
SENSITIVITY (8)	99dB
MAXIMUM SPL (9)	125dB continuous, 131dB peak, 137dB peak with crest factor 4
NOMINAL IMPEDANCE	8 ohms
DISPERSION (-6dB)	90° H x 50° V (user-rotatable)
CROSSOVER	2.2kHz passive
ENCLOSURE	Multi-angle birch/poplar ply
FINISH	Black (RAL 9005) textured paint
PROTECTIVE GRILLE	Black perforated steel with scrim cloth backing
CONNECTORS	2 x NL4 type
PIN CONNECTIONS (INPUT)	1+/1-
PIN CONNECTIONS (LINK)	1+/- connected to INPUT 1+/- and 2+/- connected to INPUT 2+/-
FITTINGS	19 x M8 inserts, pole-mount socket, 2 x bar handle
DIMENSIONS	(W) 427mm x (H) 690mm x (D) 419mm
	(W) 16.8ins x (H) 27.2ins x (D) 16.5ins
WEIGHT	24kg (52.9lbs)
ACCESSORIES	Wall bracket, eyebolts

X115

TYPE	Compact, direct radiating subwoofer
FREQUENCY RESPONSE (5)	45Hz-150Hz ± 3dB, -10dB @ 40Hz
DRIVER	15" (380mm)/3" (75mm) voice coil, long excursion, ferrite magnet
RATED POWER (2)	500W AES, 2000W peak
RECOMMENDED AMPLIFIER	MA3.0, MA5.0Q
SENSITIVITY (3)	102dB
MAXIMUM SPL (9)	129dB continuous, 135dB peak, 141dB peak with crest factor 4 (half space)
NOMINAL IMPEDANCE	8 ohms
DISPERSION (-6dB)	Omnidirectional
CROSSOVER	80-120Hz active
ENCLOSURE	Birch/poplar ply
FINISH	Black (RAL 9005) textured paint
PROTECTIVE GRILLE	Black perforated steel
CONNECTORS	3 x NL4 type
PIN CONNECTIONS (INPUT)	1+/1-
PIN CONNECTIONS (LINK-A AND LINK-B)	LINK-A: 1+/- to INPUT 1+/- and 2+/- to INPUT 2+/-, LINK-B: 1+/- connected to INPUT 2+/-
FITTINGS	16 x M10 inserts, pole-mount socket, 2 x bar handles, provision for castors
DIMENSIONS	(W) 465mm x (H) 590mm x (D) 565mm
	(W) 18.3ins x (H) 23.2ins x (D) 22.2ins
WEIGHT	27kg (59.5lbs)

X118

TYPE	Compact, direct radiating subwoofer
FREQUENCY RESPONSE (5)	42Hz-150Hz ± 3dB, -10dB @ 36Hz
DRIVER	18" (460mm)/4" (100mm) voice coil, long excursion, ferrite magnet
RATED POWER (2)	800W AES, 3200W peak
RECOMMENDED AMPLIFIER	MA3.0, MA5.0Q
SENSITIVITY (3)	101dB
MAXIMUM SPL (9)	130dB continuous, 136dB peak, 142dB peak with crest factor 4 (half space)
NOMINAL IMPEDANCE	8 ohms
DISPERSION (-6dB)	Omnidirectional
CROSSOVER	80-120Hz active
ENCLOSURE	Birch/poplar ply
FINISH	Black (RAL 9005) textured paint
PROTECTIVE GRILLE	Black perforated steel
CONNECTORS	3 x NL4 type
PIN CONNECTIONS (INPUT)	1+/1-
PIN CONNECTIONS (LINK-A AND LINK-B)	LINK-A: 1+/- to INPUT 1+/- and 2+/- to INPUT 2+/-, LINK-B: 1+/- connected to INPUT 2+/-
FITTINGS	16 x M10 inserts, pole-mount socket, 2 x bar handles, provision for castors
DIMENSIONS	(W) 530mm x (H) 669mm x (D) 640mm
	(W) 20.9ins x (H) 26.3ins x (D) 25.2ins
WEIGHT	42kg (92.6lbs)

X218

TYPE	Dual driver, high output direct radiating subwoofer
FREQUENCY RESPONSE (5)	42Hz-200Hz ± 3dB, -10dB @ 33Hz
DRIVER	2 x 18" (460mm)/4" (100mm) voice coil, long excursion, ferrite magnet
RATED POWER (2)	1,600W AES, 6,400W peak
RECOMMENDED AMPLIFIER	VIA5002, iK42
SENSITIVITY (3)	106dB
MAXIMUM SPL (9)	135dB continuous, 141dB peak, 147dB peak with crest factor 4 (half space)
NOMINAL IMPEDANCE	4 ohms
DISPERSION (-6dB)	Omnidirectional
CROSSOVER	80-120Hz active
ENCLOSURE	Birch/poplar ply
FINISH	Black (RAL 9005) textured paint
PROTECTIVE GRILLE	Black perforated steel
CONNECTORS	2 x NL4 type
PIN CONNECTIONS (INPUT)	1+/1-
PIN CONNECTIONS (LINK)	1+/- connected to INPUT 1+/- and 2+/- connected to INPUT 2+/-
FITTINGS	12 x M10 inserts, pole-mount socket, 2 x bar handles, 4 x pocket handles, castor inserts
DIMENSIONS	(W) 1049mm x (H) 587mm x (D) 727mm
	(W) 41.3ins x (H) 23.1ins x (D) 28.6ins
WEIGHT	88kg (194lbs)

Notes

(1) Measured on-axis in half (2pi) space at 2 metres, then referred to 1 metre.

(2) AES Standard ANSI S4.26-1984.

(3) Measured in half (2pi) space at 2 metres with 1 watt input, using band limited pink noise, then referred to 1 metre.

(4) Measured in half (2pi) space at 2 metres using band limited pink noise, then referred to 1 metre.

(5) Measured on-axis in open (4pi) space at 2 metres, then referred to 1 metre.

(6) Measured in open (4pi) space at 2 metres with 1 watt input, using band limited pink noise, then referred to 1 metre.

(7) Measured in open (4pi) space at 2 metres using band limited pink noise, then referred to 1 metre.

(8) Measured in open (4pi) space at 2 metres with 2.83v input, using band limited pink noise, then referred to 1 metre.

(9) Calculated at 1 metre from sensitivity and rated power.

Technical Drawings

X8

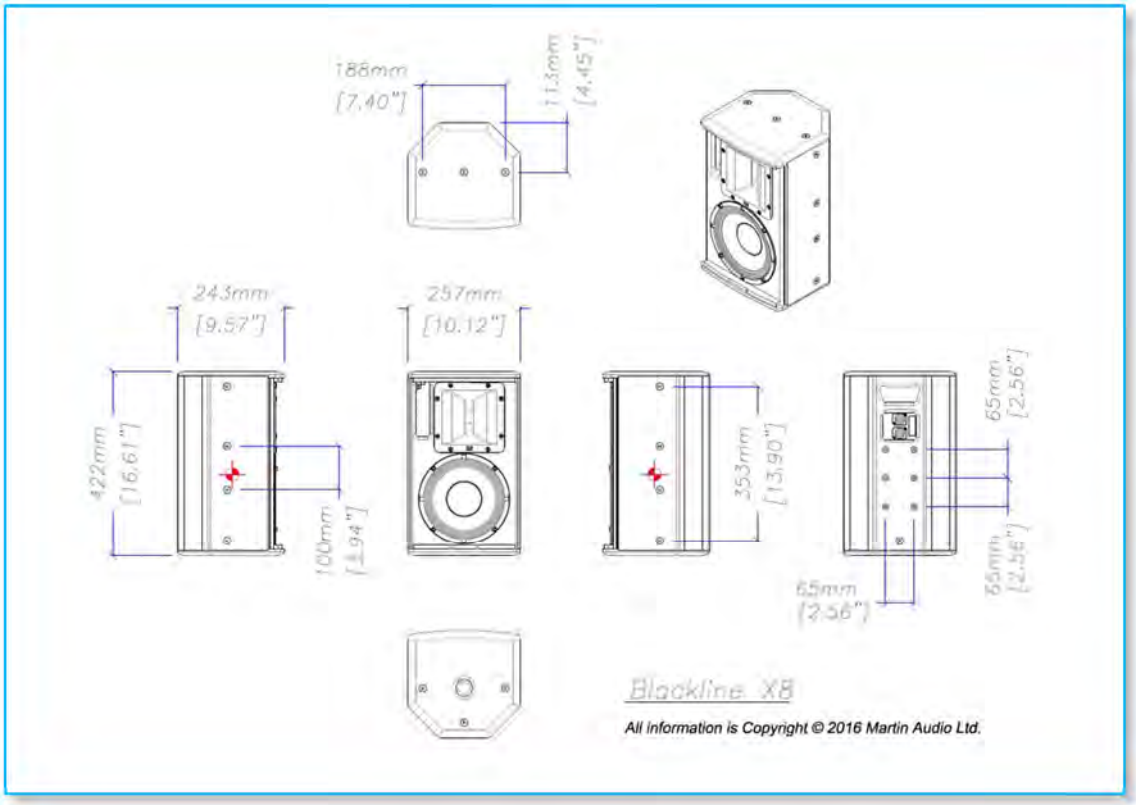

X10

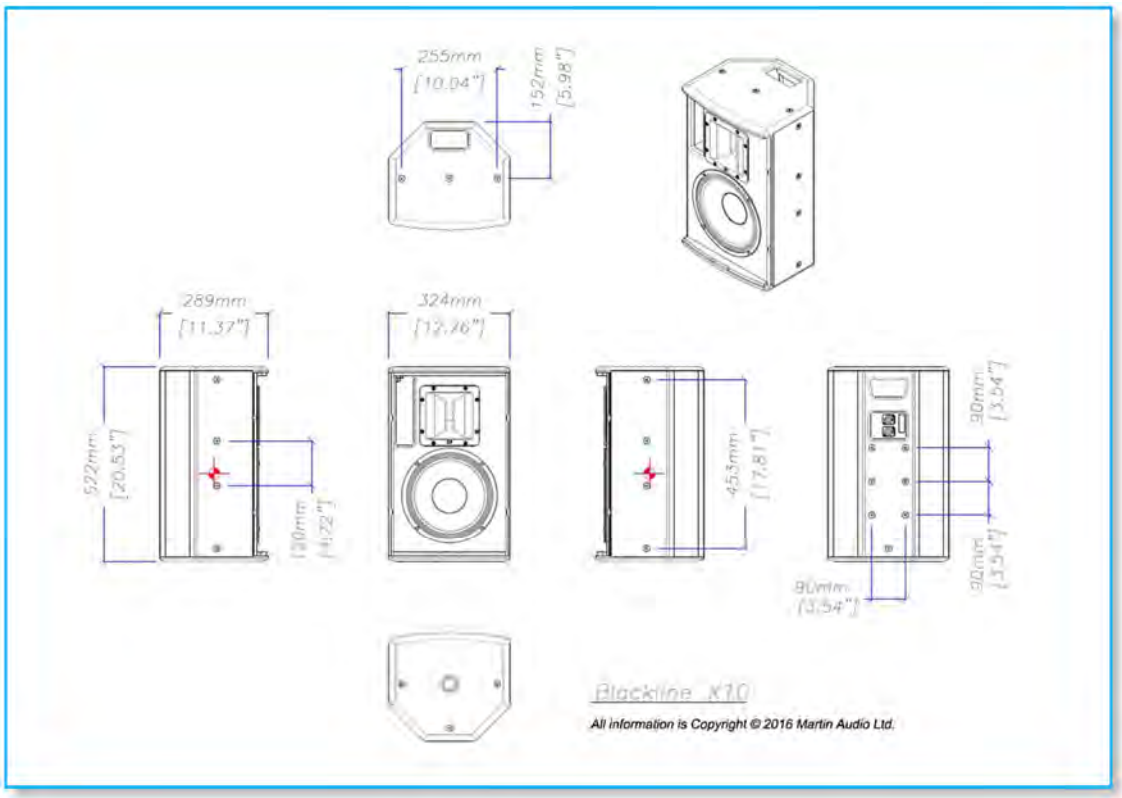

X12

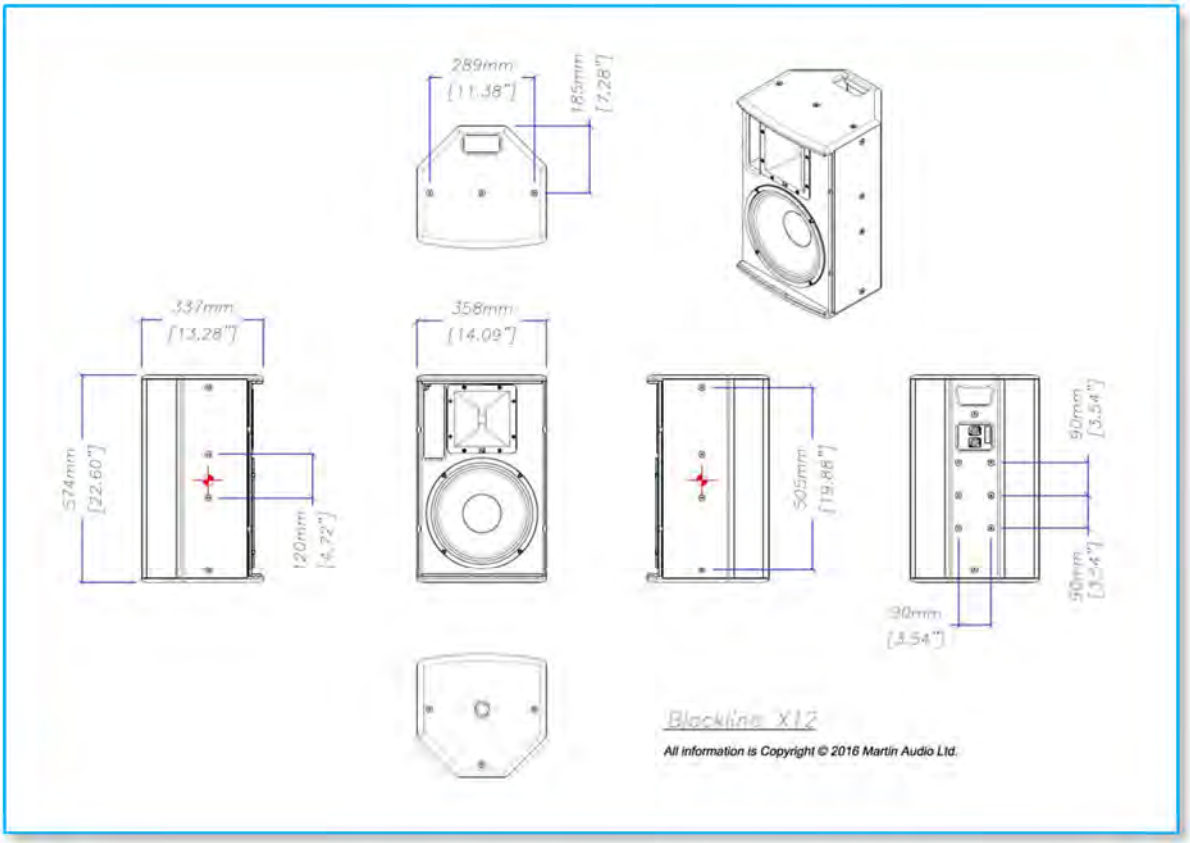
289mm
[11.38"]
185mm
[7.28"]
337mm
[13.28"]
358mm
[14.09"]
574mm
[22.60"]
120mm
[4.72"]
505mm
[19.88"]
90mm
[3.54"]
90mm
[3.54"]
90mm
[3.54"]
Blackline X12
All information is Copyright © 2016 Martin Audio Ltd.

X15

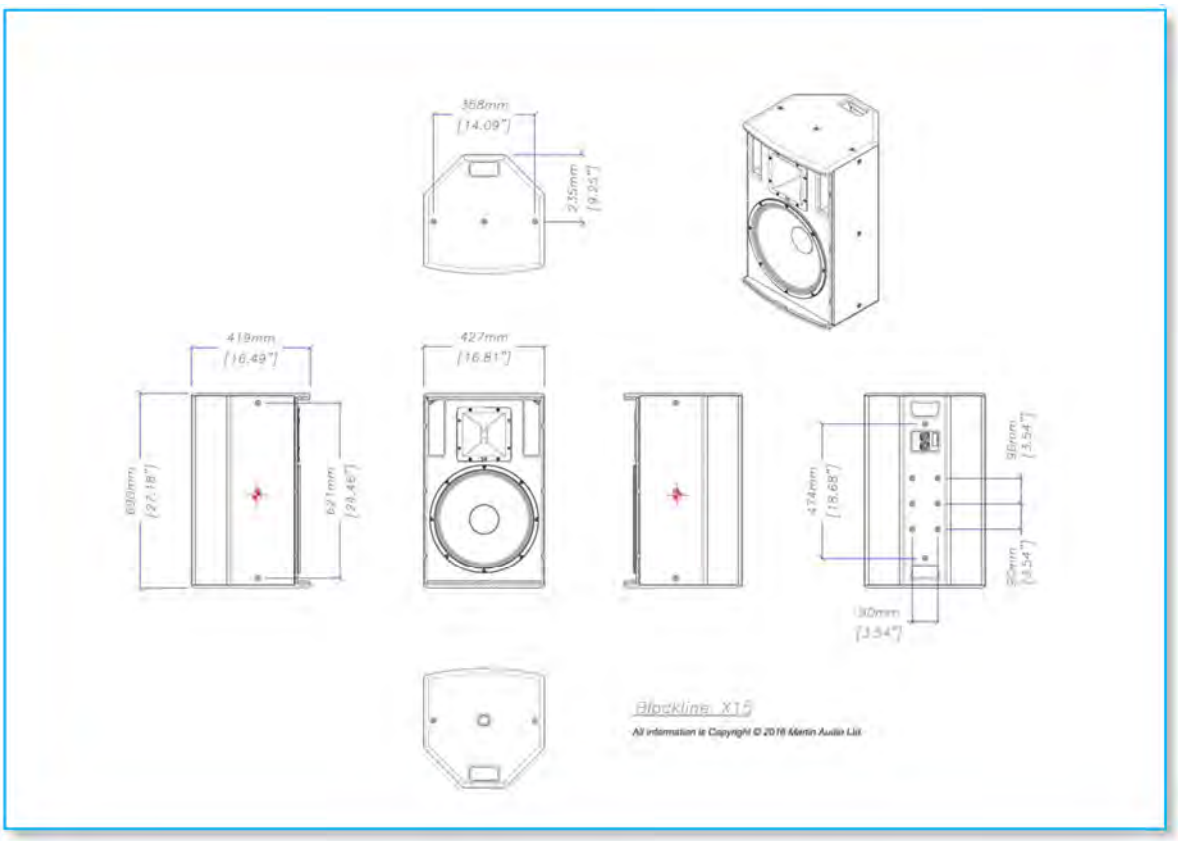
358mm
[14.09"]
235mm
[9.25"]
419mm
[16.49"]
427mm
[16.81"]
690mm
[27.18"]
621mm
[24.46"]
474mm
[18.68"]
90mm
[3.54"]
90mm
[3.54"]
90mm
[3.54"]
Blackline X15
All information is Copyright © 2016 Martin Audio Ltd.

X115

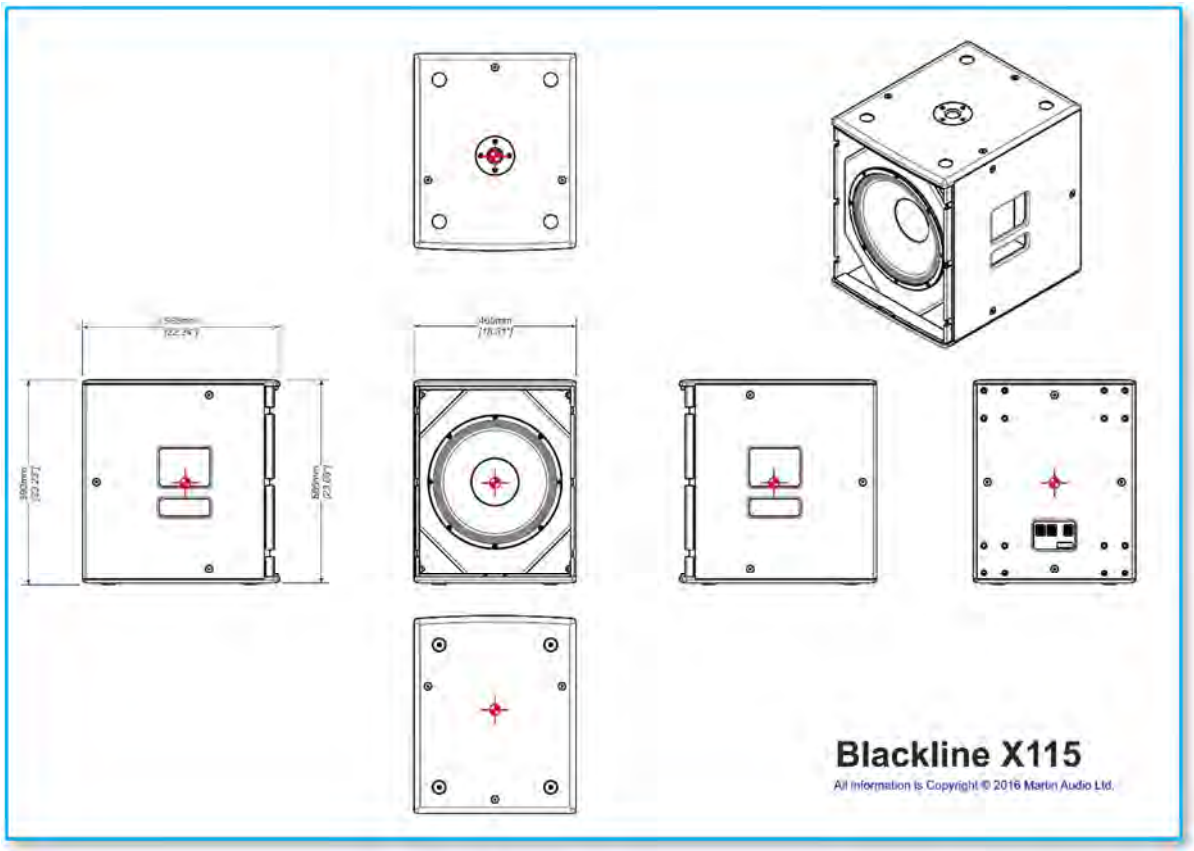
Blackline X115
All Information is Copyright © 2016 Martin Audio Ltd.

X118

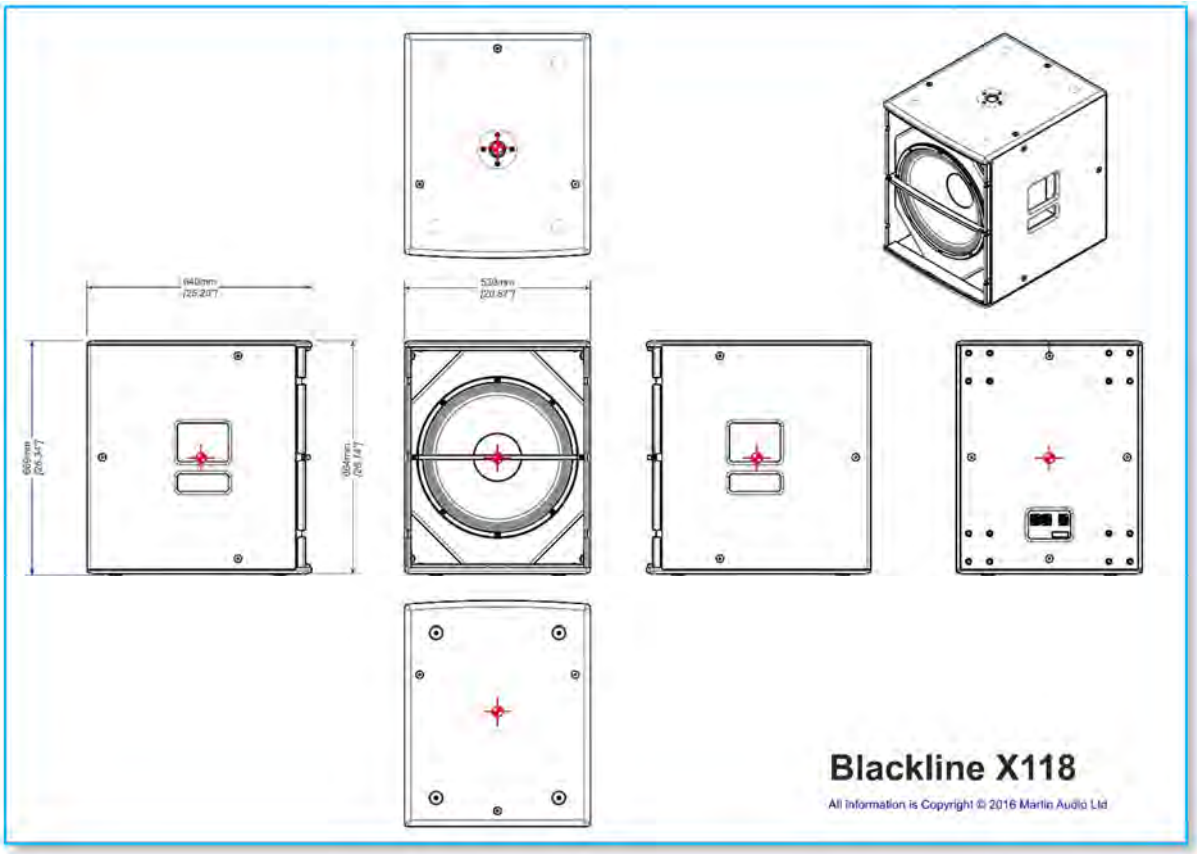
Blackline X118
All Information is Copyright © 2016 Martin Audio Ltd

X218

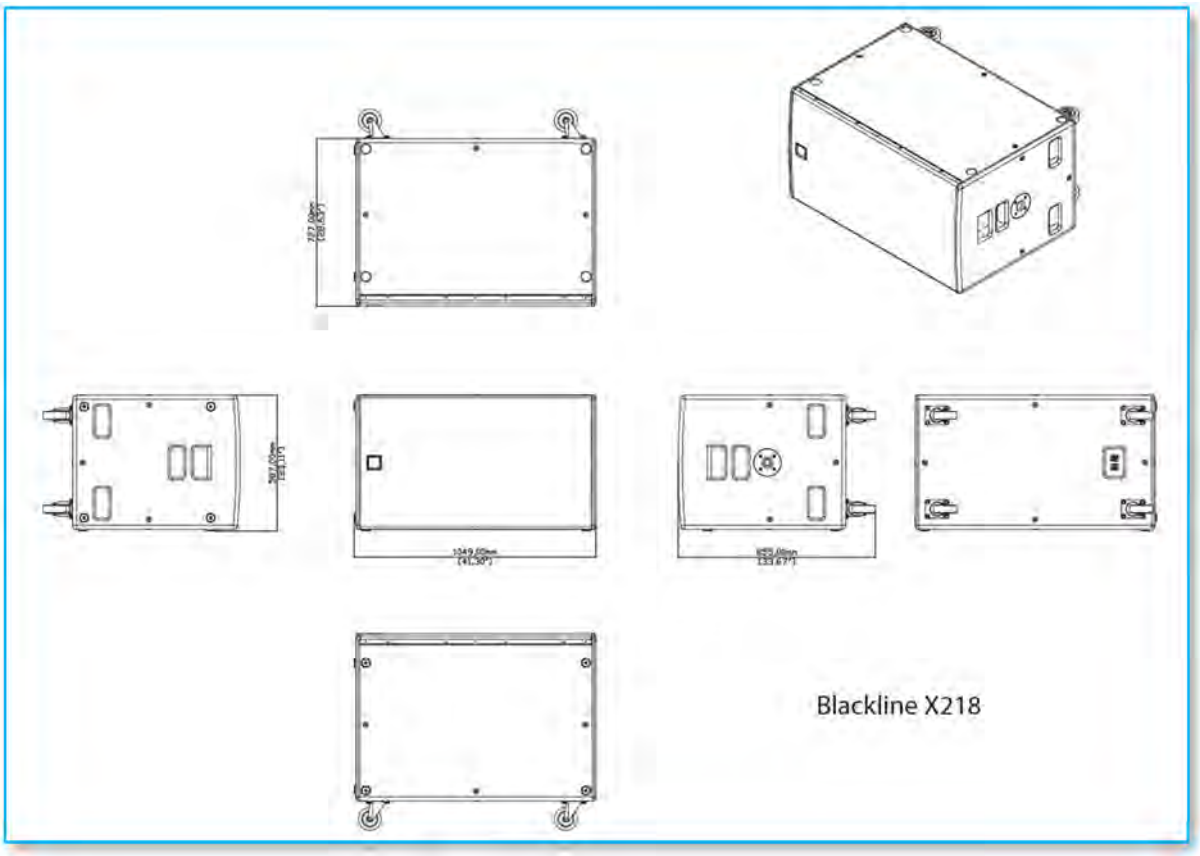

Warranty

Martin Audio BlacklineX Loudspeaker Systems are warranted against manufacturing defects in materials or craftsmanship over a period of 5 years from the date of original purchase.

During the warranty period Martin Audio will, at its discretion, either repair or replace products which prove to be defective provided that the product is returned in its original packaging, shipping prepaid, to an authorised Martin Audio service agent or distributor.

Martin Audio Ltd. cannot be held responsible for defects caused by unauthorised modifications, improper use, negligence, exposure to inclement weather conditions, act of God or accident, or any use of this product that is not in accordance with the instructions provided by Martin Audio.

Martin Audio is not liable for consequential damages.

This warranty is exclusive and no other warranty is expressed or implied. This warranty does not affect your statutory rights.

Martin Audio Limited
Century Point
Halifax Road
Cressex Business Park
High Wycombe
Buckinghamshire
HP12 3SL
England

UK
Telephone: +44 1494 535 312
info@martin-audio.com

NORTH AMERICA
Telephone: +1 323 381 5310
info@martin-audio.com

All information is Copyright © 2026 Martin Audio Ltd.

Martin Audio, the Martin Audio logo and BlacklineX are registered trademarks of Martin Audio Ltd. in the United Kingdom, United States and other countries; all other Martin Audio trademarks are the property of Martin Audio Ltd.

All other trademarks and trade names are the property of their respective owners.

www.martin-audio.com