PRERIG TRUSS 1600 STAGE BLACK

PR-TRUSS-1600B

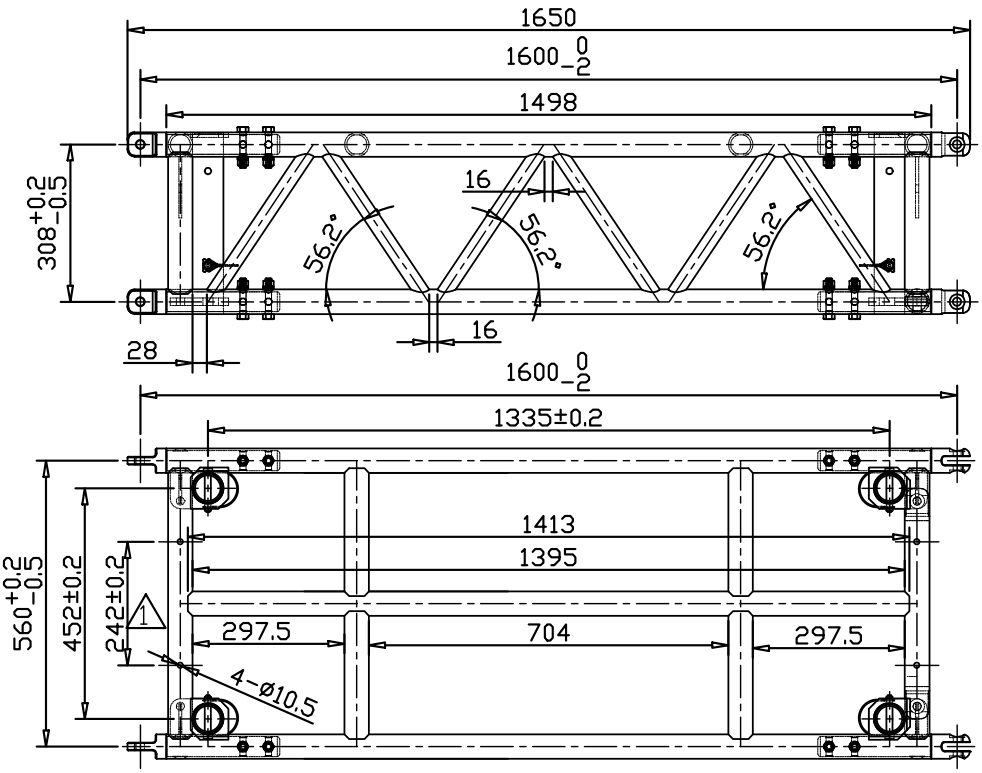

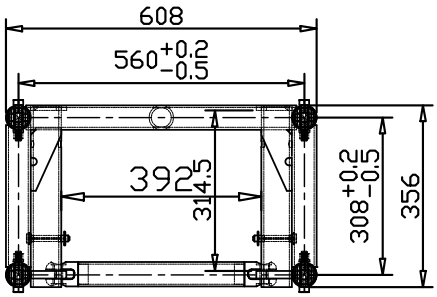

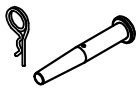

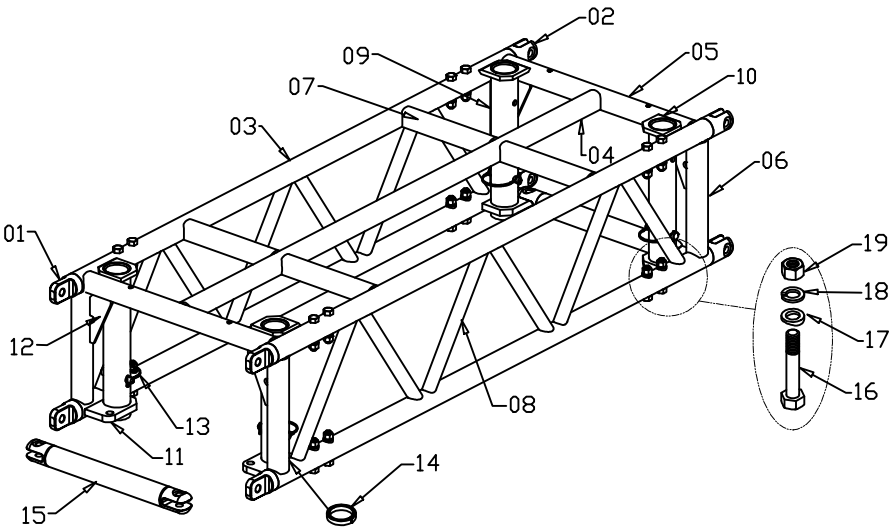

	R3		ZP	4
	PJ-CX047	42CrMo	ZP	4
19	M12*1.75P	S45C	ZP	16
18	ø12.5*ø19*3.4t	Q235	ZP	16
17	ø13*ø24*2.4t	Q235	ZP	16
16	M12*1.75P*70mm	S45C	ZP	16
15	ZC35A-L401	#6082	T6	2
14	PSJG003A		Black	8
13	PJ-CX030C	S45C	ZP	4
12	PLB02182C	#6061	T6	4
11	PLB04058	#6061	T6	4
10	PLB04056D	#6061	T6	4
09	ø60*5.0t*356mm	#6082	T6	4
08	ø30*3.0t*332.8mm	#6082	T6	12
07	ø48*4.5t*249.5mm	#6082	T6	2
06	ø48*4.5t*277.5mm	#6082	T6	4
05	ø48*4.5t*529.5mm	#6082	T6	2
04	ø48*4.5t*1413mm	#6082	T6	1
03	ø48*4.5t*1508mm	#6082	T6	4
02	CPAJT043A	#6082	T6	4
01	CPAJT042A	#6082	T6	4
NO.	SPEC.	MATERIAL	FIN.	QTY.