

NBB75FA

The BNC feed through coupler offers a true 75 Ω design for serial and digital (HD & UHD) signals. The machined brass connector body provides an extremely rugged and non-abrasive connection over long term use.

Features & Benefits

- Gold plated cage type center contact
- True 75 Ω design meets the stringent HD & UHD requirements

New cage type contact

- Closed contact design - extremely robust
- Gold plated cage type clip - best possible shielding and lowest contact resistance

All rights reserved / 13.11.2026

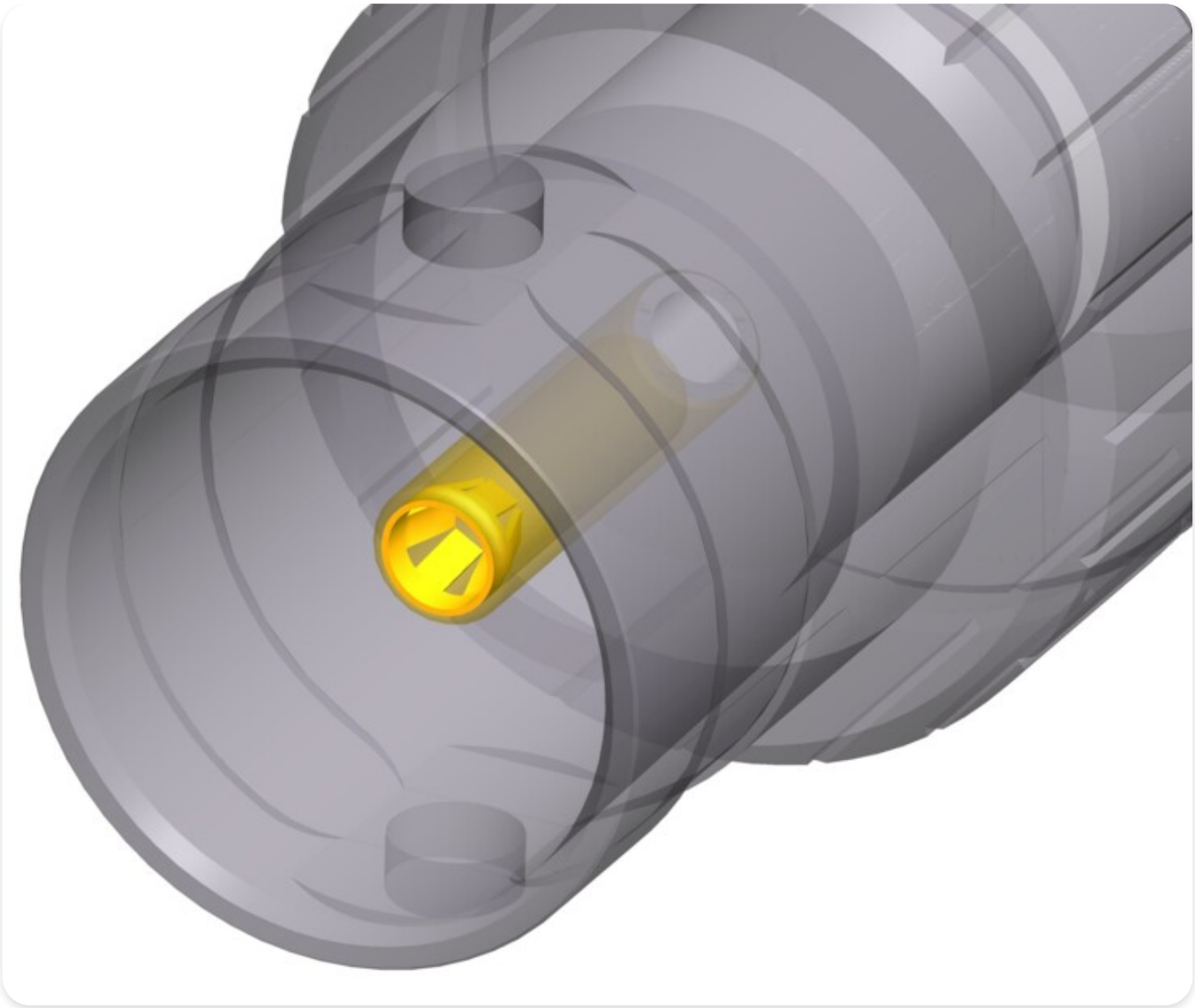

Technical Information

Product	
Title	NBB75FA
Connection Type	BNC 75 Ω
Gender	female

All rights reserved / 13.11.2026

NEUTRIK

Electrical	
Signal Type	HD, SDI, Video, AES/EBU, Composit, YUV, RGB, RGBH, RGBHV
Contact resistance	≤ 3 mΩ (inner)
Contact resistance	≤ 2 mΩ (outer)
Dielectric strength	1.5 kVdc
Insulation resistance	> 5 GΩ
Rated voltage	<50 V
VSWR	≤1.03/>37 dB up to 1 GHz ≤1.05/>32 dB up to 2 GHz ≤1.08/>28 dB up to 3 Ghz

Mechanical	
Insertion force	< 25 N
Lifetime	> 1000 mating cycles
Wiresize	
Locking device	Bayonett

Material	
Contacts	Brass (CuZn39Pb3) (ground contact)
Insert	PTFE
Shell	Brass (CuZn39Pb3)

Environmental	
Temperature range	-30 °C bis +85 °C

All rights reserved / 13.11.2026